KDF-K

Duplex filter

PN	10–25
DN	15–250
ANSI	½–10"
JIS	15–250
GOST	15–250

Lloyd's Register
Design Appraisel
Certificate no.
TSO/26-062382 / LR26395988TA

Lloyd's Register
Type Approval
Certificate no. LR26395988TA

DEKRA
ISO 9001:2015

Filter gemäß ÖNORM
ÖNORM H 5195-1

Versions

KDF-K Model with fixed flanges

Application areas

The KDF-K duplex filter can be used in pressure and suction modes and is a versatile filter for coarse and fine filtration. It is characterized by continuous filter operation during the cleaning phase. The strainer inserts are compatible with the KSF series. The filter combines the so-called housing sizes (GR) with the various nominal widths (DN) of the flange connection.

The KDF-K has a bolts and nuts cover closure and can also be delivered a quick release clamp lock (medium-dependent – risk analysis required). Subsequent on-site retrofitting is also possible.

Approvals

3.1. Certificate, DGRL/TÜV, GL, LS, DNV, ABS,
TR TF/TR CU Certificates (EAC),
Lloyd's Register Type Approval Certificate No. 16/20086

CE conformity evaluation according 2014/68/EU and marking according the directive.

Germanischer Lloyd · DNV·GL · ABS · TR TF EAC · Lloyd's Register

KRONEFILTER.COM
SOLUTIONS IN FILTRATION

Brief description

The duplex filter is casted as a single component and comprises two identical single filters wich are connected via a cock-switching device. The medium to be filtered enters the filter basket from the top and flows through the insert inside out. Dirt thus remains in the filter element.

As a special version, the filter is also available with star pleated strainer inserts (changed inlet flow).

Notice:
The compatibility between medium and vessel or sealing material is the responsibility of the operator.
The design of the pressure vessel is based on a quasi-static operation (load cycle number ≤ 1000 according to AD 2000 Merkblatt S1, section 1.4). Max. Differential pressure inlet - outlet 1 bar.

Safety instructions

Filters with clamp locks are not suitable for the filtration of hazardous/toxic media (e.G. poisonous, flammable or acids). In such cases, bolts and nuts must be selected as cover closures. Generally, use of filter with cock-switching must be checked for hazardous media (leakage rate permitted by the design). KDF-K filters are not suitable for the filtration of gases.

Check the filter for intended operation prior to usage. Conformity assessment as per PED EN 2014/68/EU must be done for changes in operating conditions or the media (kindly contact us for the same or run a risk analysis with conformity assessment).

Important: Duplex filter with switching valves have a permissible leakage rate from one chamber to other. Permissible maximum Leakage rate of the KDF-K/KDF-KF filter at delivery condition at max. design pressure (Pdesign) is approx. 50 % of the volume of the vessel in approx. 15 minutes. Information: Hence, do not leave the opened filter unattended and if required, keep an already cleaned reserve/spare basket insert/filter element ready for replacement. Check your application if plant operation safety is not endangered by this property of switch device.

Installation

Installation in pipes is done by means of flanges. Ensure that the standard version of the filter is installed vertically and mechanically tension-free without additional loads. The medium must flow in the direction specified on the housing. Incorrect installation can cause filter malfunctions and damage the inserts. The allowable differential pressure/clogging rate for the insert shall not be exceeded and can lead to equipment damage.

Commissioning

- Check whether all bolts and/or clamp closure have been tightened/fixed. Check the corrected seat.
- Check the position of the switching lever (there is a covered ⊢ on the switching valve, which defines the direction of flow and/or shows „in operation“ on the filter vessel. The Lever must be fitted accordingly).
- Venting: Venting device wich is installed in each single filter housing has to be opened till the fluid discharges. The filter is ready-to-operate after venting the single filter.
- Filter GR 4 and larger have as an option a pressure equalization line with a ball valve. Before switching the pressure has to be equalized (see pict. 2, page 6).

Download for planners *

PDF Specific data sheet according to GR
WORD Specific data sheet according to GR
STEP Schematics 3D according to DN/GR

Product online

* Krone Filter Solutions offers this special service to all clients.

KDF-K ductile cast iron KDF-K bronze

Operation

Note: Since it is a pressure vessel, it is important to ensure that the filter is without pressure prior to beginning of maintenance.

1. As soon as the filter side is dirty (increasing differential pressure on the indicator or decreasing operating pressure in the system), the clean filter side is put into operation by gradual switching of the plug valve.*
2. **Important:** If the filter is build with a pressure equalization line (see picture on page 6), then open line for easier switching and close again after change-over.
3. Proceed with cleaning (removal of filter element) only after opening the venting device slowly.
4. After opening the drain plug and draining the remaining fluid from the filter side to be cleaned, cleaning can be started:

Caution: note maximum differential pressure of the filter (standard Dp = 1 bar)

Cleaning

The filter side to be cleaned must be depressurized. Open vent carefully after switching over to the other filter side until liquid escapes.

1. Then lift by loosening the bolts and nuts of the cover of the filter half to be cleaned.
2. Drain the filter via the drain device to a level that is at least below the strainer support.
3. Pull the strainer insert upward and out of the filter housing. The strainer can now be cleaned by carefull blowing it out or blasting it with compressed air, steam, or water. If necessary the strainer must be soaked and cleaned in a suitable cleaning agent. In some circumstances optimum cleaning is achieved by means of ultrasonic bath. For all cleaning types ensure that the filter mesh is not damaged.
4. Check the seals for wear and tear during assembly, replace if necessary.

Important: Duplex filter with switching valves have a permissible leakage rate from one chamber to other. Permissible maximum Leakage rate of the KDF-K/KDF-KF filter at delivery condition at max. design pressure (Pdesign) is approx. 30 % of the volume of the vessel in approx. 15 minutes. Information: Hence, do not leave the opened filter unattended and if required, keep an already cleaned reserve/spare basket insert/filter element ready for replacement. Check your application if plant operation safety is not endangered by this property of switch device.

Information: Hence, do not leave the opened filter unattended and if required, keep an already cleaned reserve filter element ready for replacement.

Important information for switchover

For media having corrosion effect on the material of the filter, switching must be actuated regularly (2–3 times) per week.

Material/housing

DIN EN GJS-500-7 / (GGG-50/ASTM 80-55-06)
alternatively annealed GJS-400-18/(GGG 40.3)

Alternative to the standard switching valves in
EN GJS-500-7, switching valves in bronze or standard coated with Magna Coat® are also available.

Alternative vessel material

RG 10 G-CuSn(10)5

Advantages of KDF-K

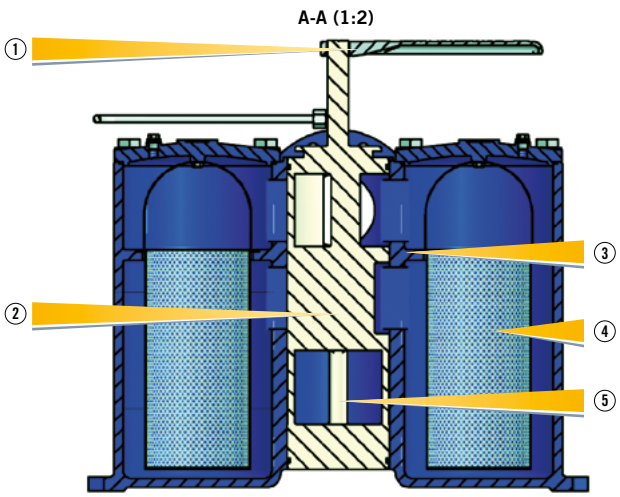

① Large ergonomic switching lever
② Smooth switching due to smoothened surface
③ Combination of connection flanges to housing sizes/filter areas
④ Dirt remains in the basket strainer
⑤ Medium-resistant switching in
- nodular cast iron
- bronze
- polymer coated, Magna Coat®

⑥ Pressure equalization line with ball valve for easy switching and switch protection

Technical data and dimensions

Duplex filter with cock-switching and flanges on opposite sides

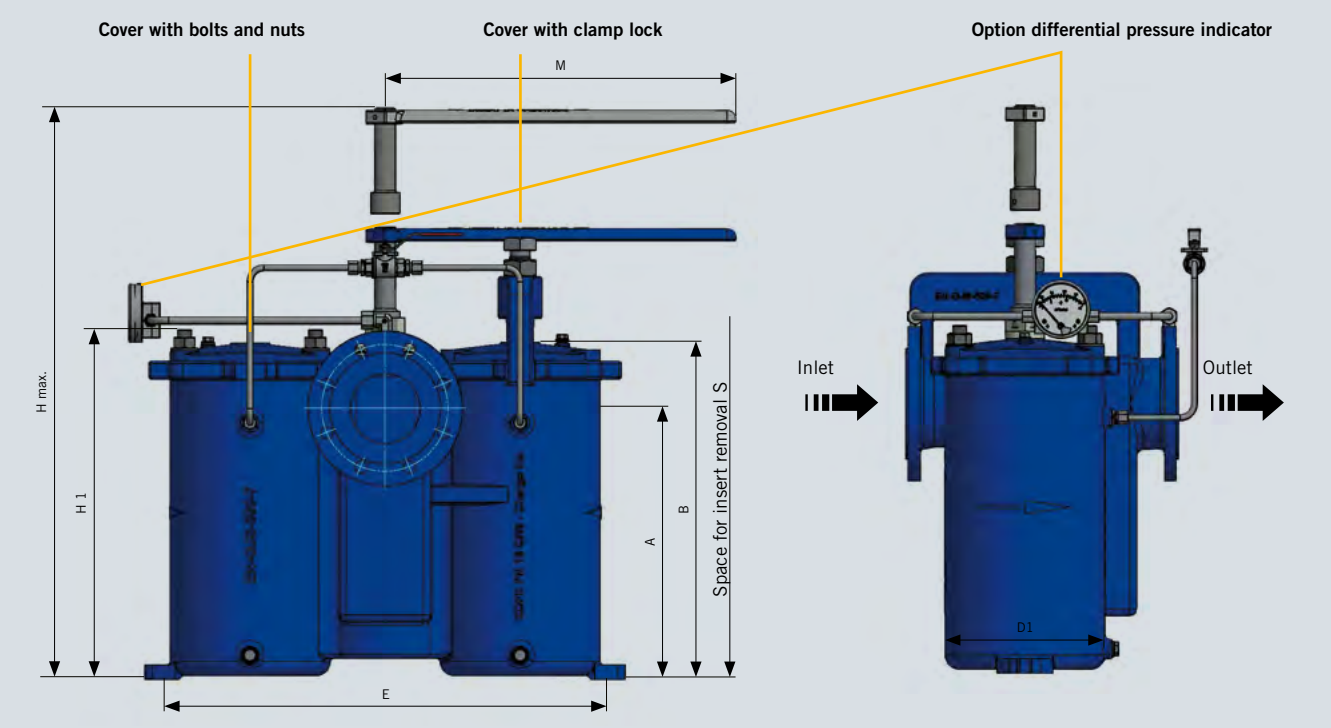

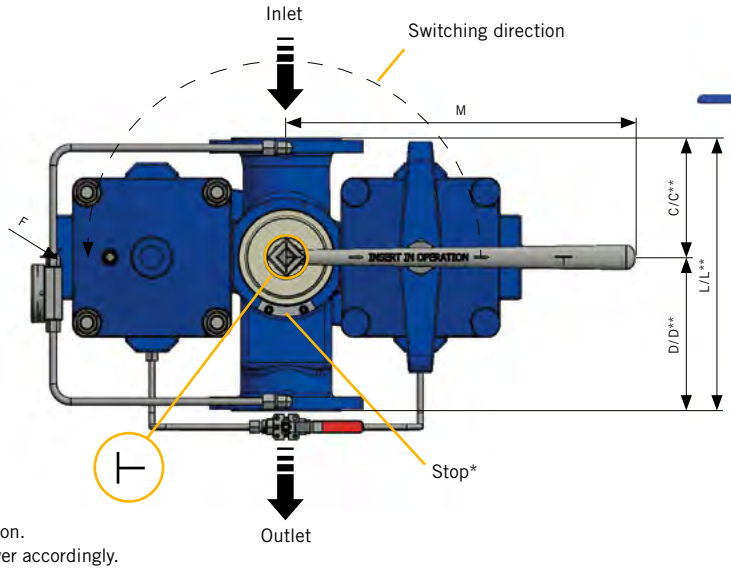

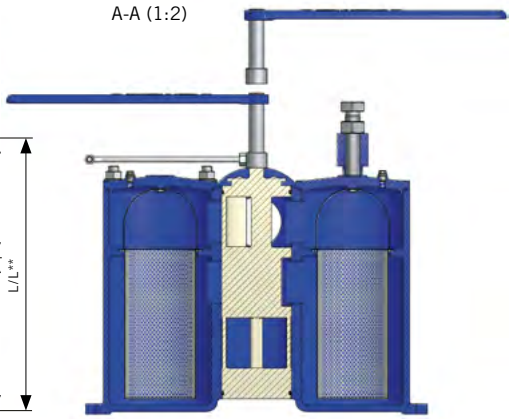

Switching valve marking points towards filter vessel in operation. Fit switching lever accordingly.

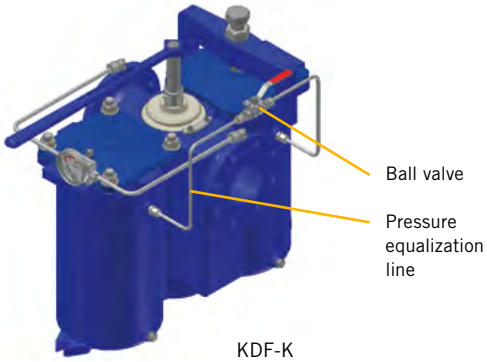

KDF-K

* Switching direction of the switching lever can be changed by changing the stop

Technical data and dimensions

Housing	Nominal diameter Flange connection	Vessel design pressure*		Ø D1	A	B	D	C	H1	E	F
Size	DN	Clamp	Bolts							Feet distance	Ø
	mm	bar	bar	mm	mm	mm	mm	mm	mm	mm	mm
1	15	16	16	82	160	195	80	100	210	250	12
	20	16	16	82	160	195	80	100	210	250	12
	25	16	16	82	160	195	80	100	210	250	12
	32	16	16	82	160	195	80	100	210	250	12
2	15	10	16	102	185	255	80	95	260	295	14
	20	10	16	102	185	255	80	95	260	295	14
	25	10	16	102	185	255	80	95	260	295	14
	32	10	16	102	185	255	80	95	260	295	14
3	32	10	16	127	230	298	100	130	320	370	12
	40	10	16	127	230	298	100	130	320	370	12
	50	10	16	127	230	298	100	130	320	370	12
4	50	6	10	168	267	328	120	185	350	510	14
	65	6	10	168	267	328	120	185	350	510	14
	80	6	10	168	267	328	120	185	350	510	14
6	65	6	10	235	405	478	175	220	500	655	14
	80	6	10	235	405	478	175	220	500	655	14
	100	6	10	235	405	478	175	220	500	655	14
	125	6	10	235	405	478	175	220	500	655	14
7	150	6	10	262	500	655	240	305	675	780	16
	200	6	10	262	500	655	240	305	675	780	16
	250	6	10	262	500	655	240	305	675	780	16

Housing	Nominal diameter flange connection	S	H	L	M	Flow rate	Volume	Filter surface area		Weight
Size	DN	Strainer removal height	Height	Installation lenght	Lever lenght	at 2,5 m/s		Basket strainer	Ring type strainer	
	mm	mm	mm	mm	mm	m^3/h	L	cm^2	cm^2	kg
1	15	410	430	180	280	3	1	150	On request	17
	20	410	430	180	280	3	1	150	On request	17
	25	410	430	180	280	4,5	1	150	On request	17
	32	410	430	180	280	4,5	1	150	On request	18
2	15	450	450	175	280	3	1,2	270	On request	21
	20	450	450	175	280	3	1,2	270	On request	22
	25	450	450	175	280	4,5	1,2	270	On request	22
	32	450	450	175	280	4,5	1,2	270	On request	22
3	32	550	480	230	280	7	3,5	440	On request	38
	40	550	480	230	280	12	3,5	440	On request	38
	50	550	480	230	280	12	3,5	440	On request	38
4	50	650	540	305	480	18	6,5	740	On request	69
	65	650	540	305	480	30	6,5	740	On request	70
	80	650	540	305	480	30	6,5	740	On request	70
6	65	900	720	395	475	30	15	1.350	On request	175
	80	900	720	395	475	45	15	1.350	On request	175
	100	900	720	395	475	70	15	1.350	On request	175
	125	900	720	395	475	70	15	1.350	On request	175
7	150	1.200	870	545	480	160	27	2.034	On request	300
	200	1.200	870	545	480	250	27	2.034	On request	300
	250	1.200	870	545	480	250	27	2.034	On request	300

* Higher vessel design pressure available upon request

All dimension subject to modification, as built in approved Krone Filter Solutions drawing. Dimensions only for information – certified dimensions in approved Krone Filter Solutions installation drawing.

Technical data

Technical data		
	Standard version	**Special version and/or additional features**
Filter element	Basket strainer insert	Ringtype strainer insert, cartridges, slot wedge wire, star pleated strainer
Filter mesh	10–1000 µm: ss mesh with ss support plate, 1 mm onwards: Perforated plate, round perforation	5 µm, square perforation, braid, cartridges, pleated mesh
Filter cover	Bolts and nuts	Clamp. Housing with clamp already predrilled for stud bolts – modification by customer possible.
Venting device	Screw	Ball valve/Flange
Draining device	Screw	Ball valve/Flange
Connection	Flange as per EN 1092-1 11B Flange position: same height, opposite sides	ANSI, JIS, GOST, as per customer specification
Material		
Housing and lid	DIN EN GJS-500-7/(GGG-50/ASTM 80-55-06)	CuSn10/Rg10 GGG-40.3/EN GJS 40-18 LT
Cover gasket O-ring	FPM	NBR, EPDM, PTFE
Perforated plate/ss mesh	SS316/SS304	SS316Ti/SS316, Ms/Bz, Hastelloy C 4, Titanium, various plastics
Switching cock	EN GJS-500-7/(GGG-50/ASTM 80-55-06) (oil version) EN GJS-500-7 coated cock with Magna Coat® polymer/flour-polymer (water version)	CuSn10/Rg10
Extras		
Additional filter	–	Magnetic filter element
Heater	–	Customized heating connection
Zinc protection/Al Anode	–	For sea water filter
Differential pressure indicator	–	Optical, with electrical contacts
Body/Cover Surface treatment		
Internal	Anti-corrosion primer or untreated	Anticorrosion oil, epoxy resin coating, rubber lining, Chemonit 33
External	Epoxy paint RAL 5010 blue	RAL as per specification
Design/Certification		
	Declaration of Conformity – Lloyds Register certified foundry acc. to PED 2014/68/EU	3.1. Certificate, PED/TÜV, GL, LS, DNV, ABS, LR TA type approval, TR TF/TR CU Certificates (EAC) or on request

Pict. 1
Differential pressure indicator
Product online

Pict. 2
Optional – pressure equalization line for easy switching

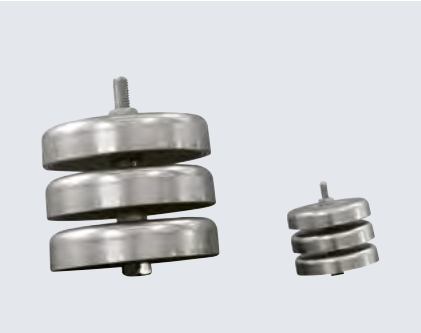

Pict. 3
Magnetic inserts
Product online

Pict. 4 – DN 80 unit with Dp indicator Dp-MAG

Pict. 5
Example KDF-VB DN 200 cast iron with rubber lining inside

Pict. 6
Example KDF-W DN 80 SS316

www.krone-filter.com

Pict. 7 – KDF-K family

Krone Filter Solutions GmbH
Industriestrasse 19 | 28876 Oyten/Germany
Phone +49 4207 98769-0 | Fax +49 4207 98769-27
filter@krone-filter.com | www.krone-filter.com
www.krone-filtershop24.com

KRONEFILTER.COM
SOLUTIONS IN FILTRATION

KF-PCIII-09-20265-D4M26013-Rev. 4.5

09.2026 © by Krone Filter Solutions GmbH, subject to change.

Certificate No: LR26395988TA
Issue Date: 09/09/2026
Expiry Date: 08/09/2031

Type Approval Certificate

This is to certify that the undernoted product(s) has/have been tested with satisfactory results in accordance with the relevant requirements of the Lloyd's Register Type Approval System.

Manufacturer	**Krone Filter Solutions GmbH**
Address	Industriestr. 19, Oyten, 28876, Germany
Type	Automatic self-cleaning and basket filters
Description	Single, duplex and self-cleaning automatic filter with several housing sizes and combinations made from standard materials spheroidal iron castings EN-GJS-500-7 (GGG 50)* or EN-GJS-400-15 (GGG 40), carbon steel optional rubber lined or stainless steel.
Trade Name	KSF, KMF, KDF-K, KDF-V, KAF, KAF-S, KAF-G, KRF
Application	Filter depending on type for diesel oil, HFO, oil, gasoline/petrol, LNG/LPG liquefied gases, nitrogen or water piping systems in ship and offshore installations classed or intended for Classification with Lloyd’s Register.
Specified Standard	Lloyd’s Register Rules and Regulations for the Classification of Ships, July 2026
Other Conditions	The manufacturer’s installation instructions are to be sought. *) Not to be used for applications with expected significant chock or vibration loads.

Torsten Schroeder

Engineering - Piping/ Decarbonisation - Senior Specialist to Lloyd's Register EMEA
A member of the Lloyd's Register group

71 Fenchurch Street, London, EC3M 4BS, United Kingdom

Lloyd's Register Group Limited, its affiliates and subsidiaries and their respective officers, employees or agents are, individually and collectively, referred to in this clause as 'Lloyd's Register'. Lloyd's Register assumes no responsibility and shall not be liable to any person for any loss, damage or expense caused by reliance on the information or advice in this document or howsoever provided, unless that person has signed a contract with the relevant Lloyd's Register entity for the provision of this information or advice and in that case any responsibility or liability is exclusively on the terms and conditions set out in that contract.

Certificate No: LR26395988TA
Issue Date: 09/09/2026
Expiry Date: 08/09/2031

Type Approval Certificate

This certificate is not valid for equipment, the design, ratings or operating parameters of which have been varied from the specimen tested. The manufacturer should notify Lloyd's Register EMEA of any modification or changes to the equipment in order to obtain a valid Certificate.

Previous Version: LR21315849TA, previous 16/20086

The Design Appraisal Document TSO/26-062383, previous HTS/ENS 34963-16, Issue 1 and its supplementary Type Approval Terms and Conditions form part of this Certificate.

71 Fenchurch Street, London, EC3M 4BS, United Kingdom

Lloyd's Register Group Limited, its affiliates and subsidiaries and their respective officers, employees or agents are, individually and collectively, referred to in this clause as 'Lloyd's Register'. Lloyd's Register assumes no responsibility and shall not be liable to any person for any loss, damage or expense caused by reliance on the information or advice in this document or howsoever provided, unless that person has signed a contract with the relevant Lloyd's Register entity for the provision of this information or advice and in that case any responsibility or liability is exclusively on the terms and conditions set out in that contract.

Certificate No: LR26395988TA
Issue Date: 09/09/2026
Expiry Date: 08/09/2031

Appendix

RATINGS	Filter	Nominal Pressures [bar]	Size range:	Material:
	KSF	6, 10, 25	DN 15 – DN 600	Spheroidal iron casting
	KMF	6, 10, 25	G ½" – 2 ½"	Spheroidal iron casting
	KDF-K	6, 10, 25	DN 15 – DN 250	Spheroidal iron casting
	KDF-V	6, 10, 25	DN 100 – DN 600	Spheroidal iron casting, carbon steel
	KRF	6, 10	DN 32 – DN 400	Spheroidal iron casting, carbon steel
	KAF	6, 10	DN 50 – DN 1000	Spheroidal iron casting, carbon or stainless steel,
	KAF-S	6, 10	DN 50 – DN 1000	Spheroidal iron casting, carbon or stainless steel,
	KAF-G	6, 10	DN 50 – DN 1000	Spheroidal iron casting, carbon or stainless steel,

Material:	Temperature range:	For fluids**:
Spheroidal cast iron	-10 up to +300°C	MDO, HFO, oil, gasoline/petrol, seawater, river water, demineralized water
Austenitic stainless steel: 1.4571, 1.4401, 1.4404, 1.4408, 1.4539, 1.4301, 1.4541, SA240-304L, SA240-316Ti, SA240-321, SA240-316L, SA240-904L,	-196 up to +300°C	MDO, HFO, oil, nitrogen, LNG/LPG liquefied gases, gasoline/petrol, seawater, river water, demineralized water
Duplex stainless steel: 1.4462, 1.4463, UNS S31803	-40 up to +250°C	seawater
Super duplex: 1.4410, UNS 32750		
Carbon steel: St 50, P235GH, P245GH, P250GH, P265GH, SA516 Gr60, SA516 Gr70 SA516 Gr60+N, SA516 Gr70+N	-40 up to +100°C	MDO, HFO, oil, gasoline/petrol, seawater, river water, demineralized water

**) including fluids and mixture of similar evaluation class

Pressure reductions at elevated temperatures are to be considered.

Media depending on type: KAF, KAF-S, KAF-G, KRF: water, seawater
KSF, KMF, KDF-K and KDF-V: MDO, oil, nitrogen, water, seawater

Lloyd's Register Group Limited, its affiliates and subsidiaries and their respective officers, employees or agents are, individually and collectively, referred to in this clause as 'Lloyd's Register'. Lloyd's Register assumes no responsibility and shall not be liable to any person for any loss, damage or expense caused by reliance on the information or advice in this document or howsoever provided, unless that person has signed a contract with the relevant Lloyd's Register entity for the provision of this information or advice and in that case any responsibility or liability is exclusively on the terms and conditions set out in that contract.

LLOYD'S REGISTER TYPE APPROVAL – DESIGN APPRAISAL DOCUMENT

Issued by: HAMBURG TECHNICAL SUPPORT OFFICE (TSO/26-062382)

Issued to: KRONE FILTER SOLUTIONS GMBH

For: SINGLE, DUPLEX AND AUTOMATIC FILTER

Types: KSF, KMF, KDF-K, KDF-V, KAF, KAF-S, KAF-G, KRF

The undernoted documents have been reviewed for compliance with the requirements of the Lloyd's Register Type Approval System Procedure TA14 Version 06 (April 2025) and this Design Appraisal Document forms part of the Certificate.

APPROVAL DOCUMENTATION

-	Application Checklist	26.05.2026
-	Product Catalogue / general Data sheets for types KSF, KMF,KDFK, KDFV, KDF and KRF	2014
KSF LR Data sheet, Rev. 4	KSF	2016
KSF080.04.16.00.01, Rev. 0	AW 613 PN16 DN 80 incl. Parts list	22.04.2008
KSF80.04.16.01.01, Rev. 1	Body DN 80 GR4	10.03.2006
KSF000.05.16.02.01, Rev. 0	Cover GR5	25.03.2009
KMF LR Data sheet, Rev. 4	KMF	2016
KMF000.03.05.16.00.01, Rev 0	KMF GR3 incl. Parts list	22.11.2013
KMF000.03.05.16.01.01, Rev 0	Body KMF GR3 / GR1 ½" – G2"	22.11.2013
KSF000.03.05.16.02.01, Rev.1	KSF Cover GR3	24.11.2011
KDFK LR Data sheet, Rev. 4	KDFK	2016
KDFK080.06.05.10.00.01, Rev. 0	KDFK DN 80 PN 10 incl. Parts list	24.02.2011
KDFK080.04.05.10.01.02, Rev.2	KDFK Body GR4 DN 80 PN10 JIS 10K	20.03.2014
KSF000.06.10.02.01, Rev. 0	Cover GR6	31.03.2009
KDFK250.07.05.10.00.01	KDF-K Double filter DN 250 PN 16	23.10.2019
KDFK250.07.05.10.01.01	KSF Body DN 250 PN 10 Gr. 7	23.10.2019
KSF00.08.05.10.02.01, rev. 1	Cover KSF Gr.8	01.04.2009
KDFV LR Data sheet, Rev. 2	KDFV	2016
KDFV150.07.05.10.00.20, Rev 1	KDFV GR7 DN 150 incl. Parts list	12.07.2012
KDFV150.07.05.10.01.20, Rev 1	KDFV Body GR7 DN 150	27.04.2012
KDFV150.07.05.16.08.20, Rev 4	KDFV Body Change Over GR7 DN 150	12.07.2012
KSF000.07.05.10.02.01, Rev. 0	Cover GR7	24.02.2011
KAF LR Data sheet, Rev. 0	KAF	2016
KAF150.01.16.05.00.01, Rev. 0	KAF DN 150 PN5 JIS B 2220 K5 FF incl. Parts list	16.05.2014
KAF150.00.05.05.01.02, Rev. 0	Body KAF DN 150 PN5	16.05.2014
KAF150.00.16.05.01.02, Rev. 0	Body KAF DN 150 PN5 rubber lined incl. Parts list	16.05.2014
KAF150.00.05.10.02.01, Rev. 0	KAF Cover DN 150 PN 19 / DNC-50	12.12.2013
KAF150.00.16.10.02.01, Rev. 0	KAF Cover DN 150 PN 19 / DNC-50 incl. Parts list	12.12.2013
KRF LR Data sheet, Rev. 4	KRF-BF	2016

Lloyd's Register Group Limited, its affiliates and subsidiaries and their respective officers, employees or agents are, individually and collectively, referred to in this clause as 'Lloyd's Register'. Lloyd's Register assumes no responsibility and shall not be liable to any person for any loss, damage or expense caused by reliance on the information or advice in this document or howsoever provided, unless that person has signed a contract with the relevant Lloyd's Register entity for the provision of this information or advice and in that case any responsibility or liability is exclusively on the terms and conditions set out in that contract.

TEST REPORTS

PRJ111005142747	Production Quality Assessment in Oyten	13.07.2026
HPC1461050/01	LR Works Inspection including hydrostatic burst pressure tests at 100 bar for type KSF: DN 50, size 2; KSF: DN 80, size 4 and KSF: DN 100, size 8	14.12.2015
HPC1461050/02	hydrostatic burst pressure tests at 100 bar for type KMF: 2 ½" size 4; type KDF-K : DN 80, size 6 and KDF-K: DN 20, size 2 witnessed by LR Surveyor at Krone in Oyten	17.12.2015
HPC1461050/03	hydrostatic burst pressure tests at 40 bar for type KAF: DN 200, PN 10 and at 64 bar for type KDF-V: DN 150, size 7, PN 16 witnessed by LR Surveyor at Krone in Oyten	21.12.2015
HPC1461050/04	Visit of an existing installation with function test of KAF self-cleaning automatic filter at 'Elbphilharmonie Hamburg'	11.01.2016

Torsten Schröder
Senior Specialist
Engineering Systems
Global Technical Support Office
Lloyd's Register EMEA
T +49 (0)40 349 700 10 259
E torsten.schroeder@lr.org

Supplementary Type Approval Terms and Conditions

Type Approval certifies that a representative sample of the product(s) referred to herein has/have been found to meet the applicable design criteria for the use specified herein. It does not mean or imply approval for any other use, nor approval of any product(s) designed or manufactured otherwise than in strict conformity with the said representative sample.

Type Approval is based on the understanding that the manufacturer's recommendations and instructions and any relevant requirements of the Rules and Regulations are complied with.

Type Approval does not eliminate the need for normal inspection and survey procedures required by the Rules and Regulations. Lloyd's Register EMEA reserves the right to cancel or withdraw this Type Approval Certificate in accordance with the Lloyd's Register Type Approval System Procedure.

Lloyd's Register Group Limited, its affiliates and subsidiaries and their respective officers, employees or agents are, individually and collectively, referred to in this clause as 'Lloyd's Register'. Lloyd's Register assumes no responsibility and shall not be liable to any person for any loss, damage or expense caused by reliance on the information or advice in this document or howsoever provided, unless that person has signed a contract with the relevant Lloyd's Register entity for the provision of this information or advice and in that case any responsibility or liability is exclusively on the terms and conditions set out in that contract.