KRF

Backflush filter

For continuous flow without process interruption during cleaning process

PN	10–40
DN	32–800
ANSI	1½–32"

Lloyd's Register
Design Appraisel
Certificate no.
TSO/26-062382 / LR26395988TA

Lloyd's Register
Type Approval
Certificate no. LR26395988TA

DEKRA certified
ISO 9001:2015

Aplications

The KRF backflush filter is a versatile self-cleaning filter for water and conditioned process water. Filtration rates of up to 25 µm are possible with this filter type.

Characteristics

- Continuous flow without process interruption
- Low flush volumes in the cleaning process
- Filter fineness from 25 µm to 2 mm.

Approvals

3.1. Certificate, DGRL/TÜV, GL, LS, DNV, ABS,
TR TF/TR CU Certificates (EAC), ASME U-Stamp,
Lloyd's Register Type Approval Certificate No. 16/20086

CE conformity evaluation according 2014/68/EU and marking according the directive.

Germanischer Lloyd · DNV·GL · ABS · TR TF EAC · Lloyd's Register

KRONEFILTER.COM
SOLUTIONS IN FILTRATION

Brief description and operation

The filter consists of an vessel with three different chambers. There is a coarse screen that is used as a prefilter in the first prefiltration chamber with the water inlet. The operating pressure at the filter outlet has to be at least 2–3 bar.

The water flows from the outside to the inside of prefilter. Once, the water gets inside the filter, it goes into the second chamber that is called “filtration chamber”. In this chamber is the filtering element: the FILTER INSERT.

The medium flows through the filter insert from the inside to the outside. The dirt particles remain inside and settle on the surface whereby a pressure loss occurs. The electronic control monitors the differential pressure applied to the strainer by differential pressure switch. If the preset standard differential pressure of 0.3 bar (0.1–0.7 bar setting possible depending on the design and application) is reached, the cleaning function is triggered. In addition the cleaning function can be triggered by a timer or manually by pressing a button, depending on the operating conditions (as optional). The filter backwashing bases on a third chamber, the backwashing chamber, whose outlet is connected to the drainage valve that allows water evacuation when the backwashing process starts. The backwashing chamber is separated from the filtration chamber by a special sealing.

The SUCTION SCANNER is at the same place as the filtering cartridge central shaft and it is hydraulically connected to the backwashing chamber. The SUCTION NOZZLES are installed in the filtration chamber. The nylon brushes nearly reach the screen. The position of these nozzles in the suction scanner has been studied for getting into contact with the screen internal surface, thanks to the spiral movement that the electric motor provides to the scanner: when combining a longitudinal and rotation movement.

Notice:
The compatibility between medium and vessel or sealing material is the responsibility of the operator.
The design of the pressure vessel is based on a quasi-static operation (load cycle number ≤1000 according to AD 2000 Merkblatt S1, section 1.4). Max. Differential pressure inlet - outlet 1 bar.

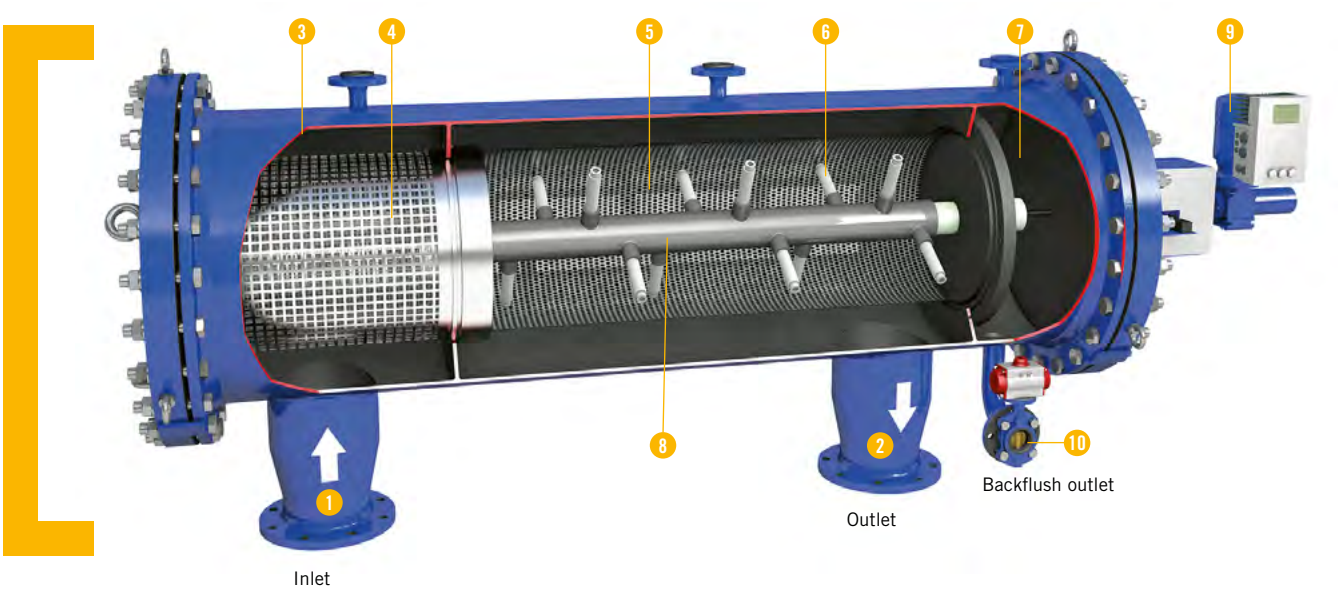

1 Inlet
2 Outlet
3 Prefilter chamber*
4 Prefilter*
5 Filter insert
6 Suction nozzles
7 Backwash filter
8 Suction-scanner
9 Motor drive
10 Backflush outlet

* Options differ from model to model (KRF with pre filter chamber). KRF-RL and KRF-C without chamber.

Functional description of the cleaning process

- Water gets into the filter through the prefiltration chamber, where bigger particles are retained.
- Water gets into the filtering chamber, goes through from inside to outside the FILTER INSERT.
- The dirt particles remain on the screen interior what produces head loss between the filter inlet and outlet gradually. Two analogic measuring transducers will indicate the backwashing sequence when the DP becomes 0.3 bar. There are other possibilities to start backwashing: Backwashing by time, time and pressure combination, continuous backwashing option, or by pressing a button.
- When the pressure switch indicates 0.3 bar, the drain valve receives the opening signal. Then it generates a pressure difference between outside (atmospheric pressure) and the inside of the filter (working pressure). That is the reason why the water flows through the strainer insert to the flushing outlet. Besides this, the starting signal is also sent to the motor.
- The result of these actions: the suction effect of the nozzles on the dirt particles sticking to the filter insert and the suction scanner spiral movement in the inside of the filter. The necessary working pressure at filter outlet is minimum 2–3 bar. For fine filtering below 100 micron and depending on water quality the necessary working pressure shall be over 3.0 bar. Higher working pressure is positive for the cleaning effect.
- During the backwashing process that lasts 25 seconds for most models, water is still being filtered and flows to the system or application. This fact allows that the backwashing water consumption is MINIMUM and the working system is CONTINUOUS.
- After the set flushing period elapses the backflushing outlet valve closes automatically and the cleaning cycle ends.

KRF product video

Info about the function

Product online

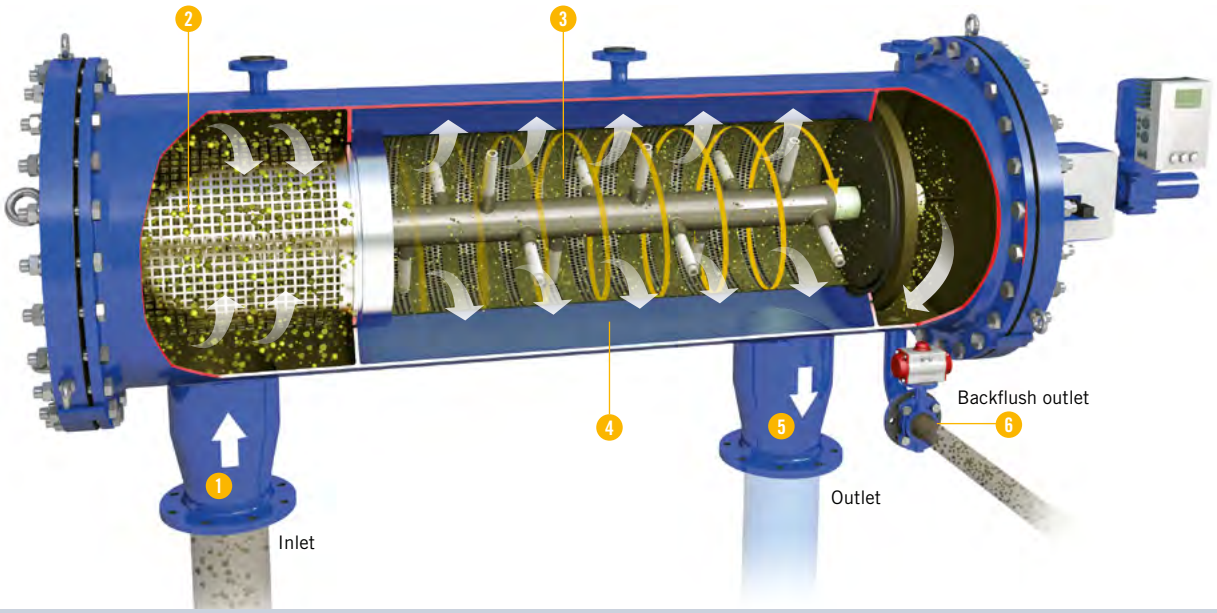

1. Dirt water inlet
2. Dirt water prefiltration (coarse particles)
3. Dirt side
4. Cleaned side
5. Filtered water outlet
6. Flush outlet

Head loss graph

KRF 50 µm

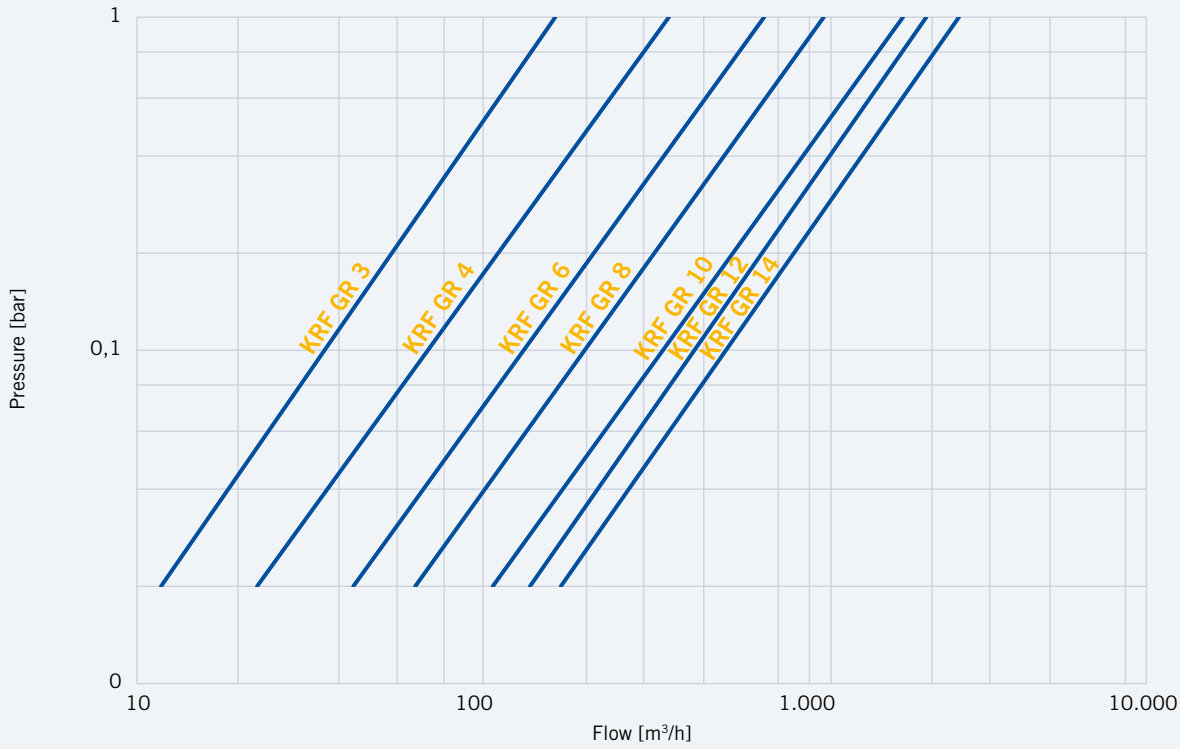

KRF 80 µm

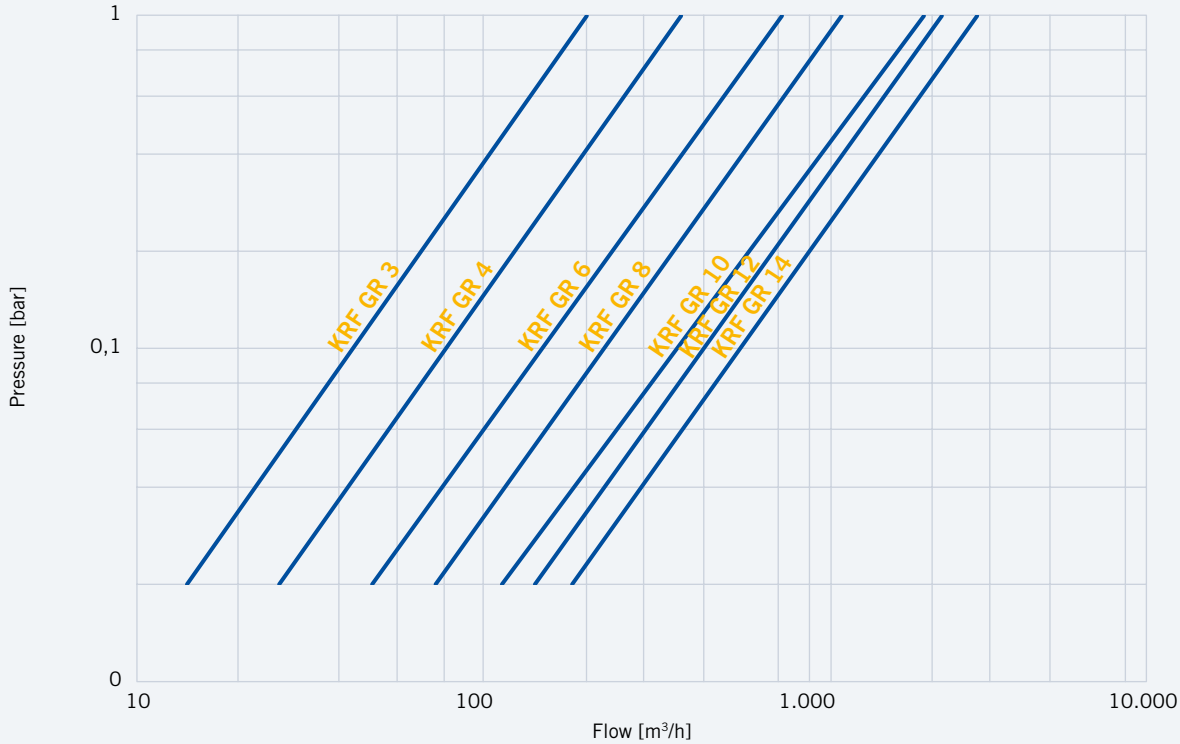

Head loss graph

KRF 125 µm

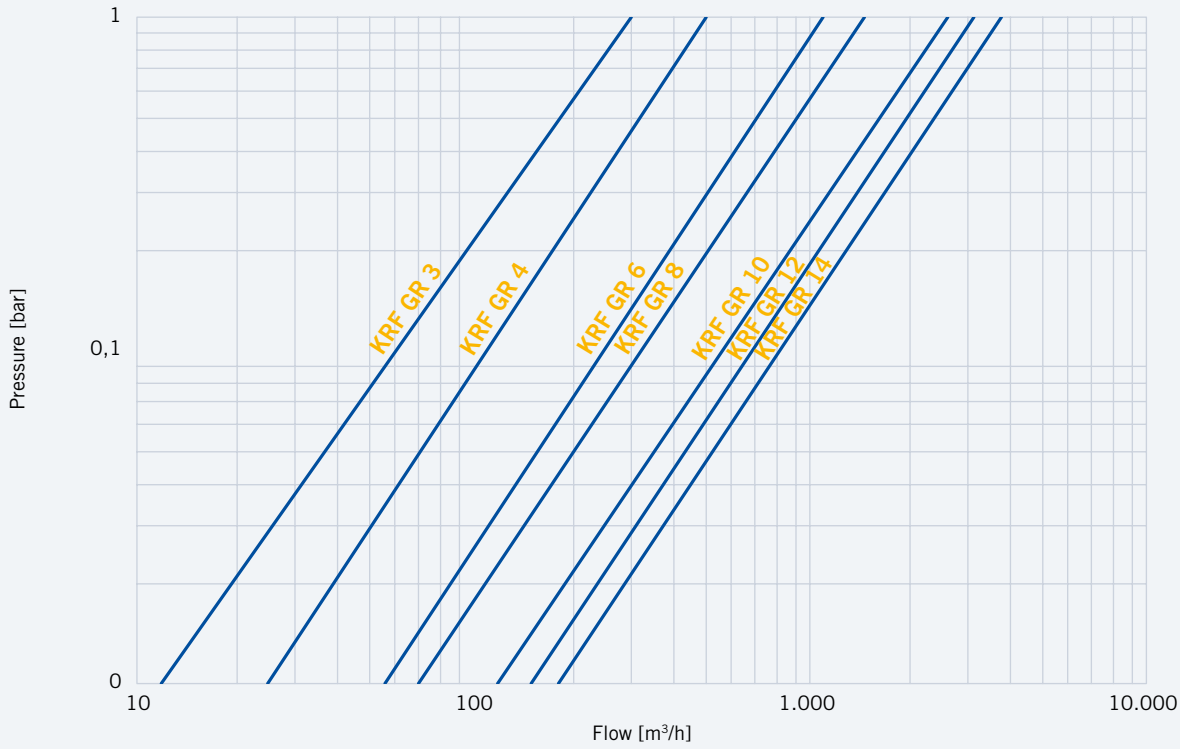

KRF 1.500 µm

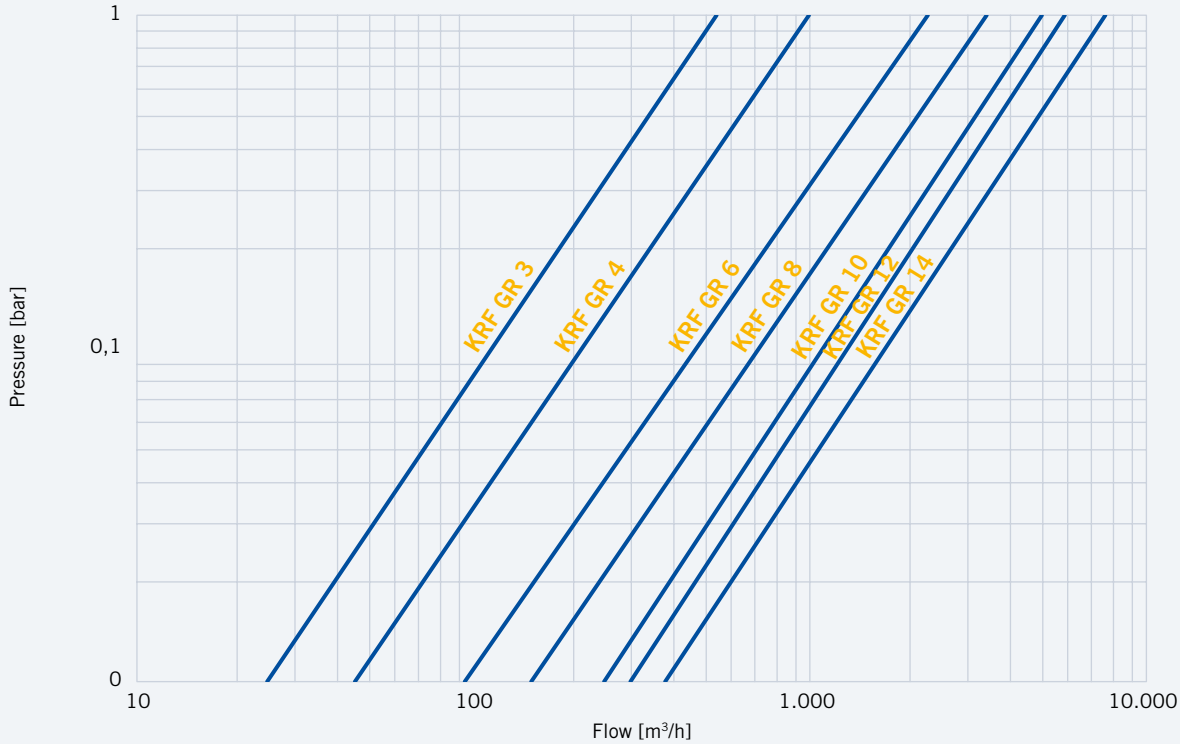

Technical data and dimensions

KRF

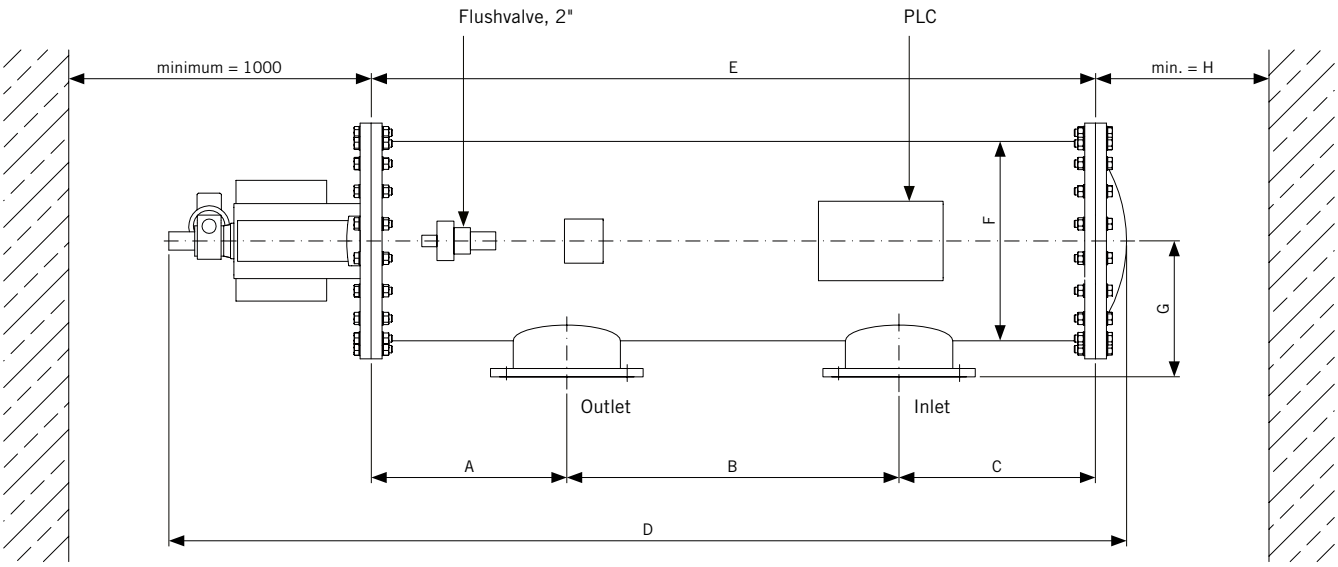

Model	Nom. diameter Flange connection	A	B	C	D	E	F	G	H	Filter surface area
	DN	mm	mm	mm	mm	mm	mm	mm	mm	cm²
KRF GR 3	80	302	360	219	1.625	881	457	325	400	2.657
KRF GR 4	80, 100	315	770	220	2.140	1.305	457	325	690	5.383
KRF GR 6	80, 100, 150	340	1.000	240	2.415	1.580	457	325	970	7.997
KRF GR 8	100, 150, 200	367	1.100	388	2.690	1.855	457	325	1.240	10.608
KRF GR 10	150, 200, 250	446	1.370	314	2.965	2.130	457	325	1.520	13.215
KRF GR 12	200, 250, 300	430	1.100	325	2.707	1.855	660	450	1.240	16.509
KRF GR 14	250, 300, 350	433	1.370	327	2.982	2.130	660	450	1.520	21.304

Model	Nom. diameter Flange connection	Flushing volume/backflush	Weight	Max. flow rate	High quality water	Medium quality water	Low quality water
	DN	L	kg	m³/h*	Flow rate m³/h*	Flow rate m³/h*	Flow rate m³/h*
KRF GR 3	80	35	265	120	60	48	34
KRF GR 4	80, 100	70	307	235	110	90	70
KRF GR 6	80, 100, 150	105	388	500	215	173	129
KRF GR 8	100, 150, 200	140	444	700	320	256	192
KRF GR 10	150, 200, 250	175	501	1.150	580	464	348
KRF GR 12	200, 250, 300	140	682	1.400	700	560	420
KRF GR 14	250, 300, 350	175	757	1.800	900	720	540

* Flow rates are based on 100/125 micron and depend on water quality and filter mesh. So the actual allowed flow may vary. Contact Krone for exact dimensioning.

Technical data and dimensions

KRF-C

For low flow rates

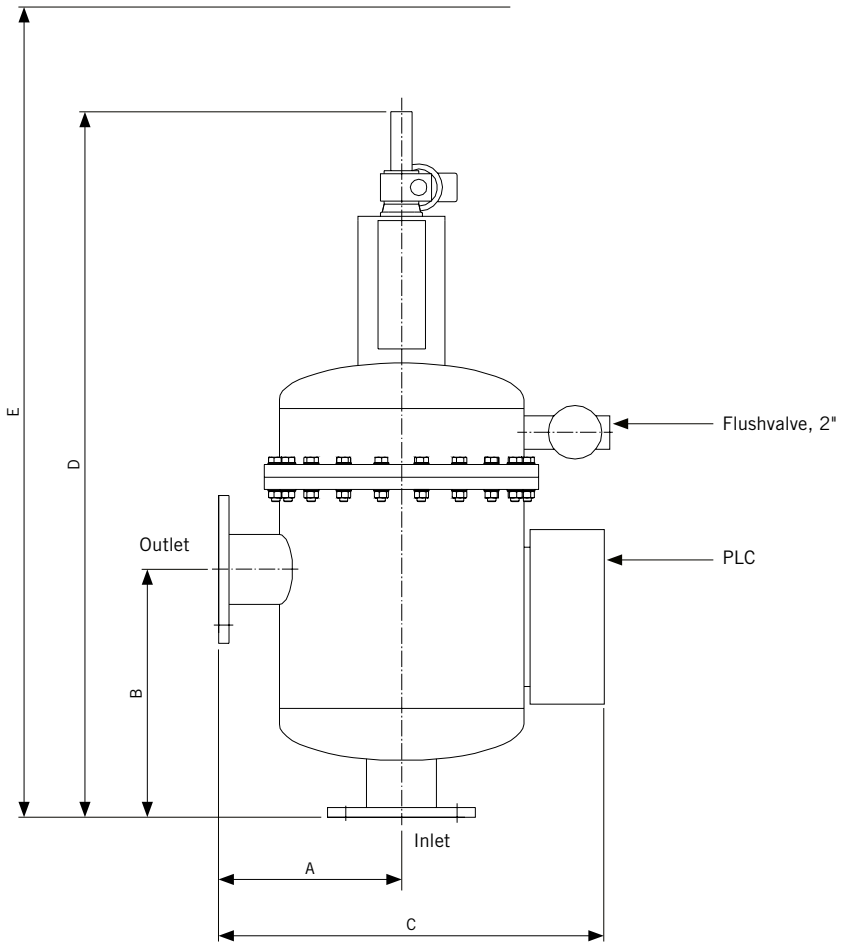

Model	Nom. diameter Flange connection	A	B	C	D	E	Filter surface area
	DN	mm	mm	mm	mm	mm	cm²
KRF-C GR 2	50	220	220	480	900	1.150	1.600
KRF-C GR 3	80	220	250	480	980	1.230	1.600
KRF-C GR 4	100	260	320	590	1.100	1.340	2.475
KRF-C GR 6	150	260	470	590	1.375	1.615	4.950

Model	Nom. diameter Flange connection	Flushing volume/backflush	Weight	Max. flow rate	High quality water	Medium quality water	Low quality water
	DN	L	kg	m³/h*	Flow rate m³/h*	Flow rate m³/h*	Flow rate m³/h*
KRF-C GR 2	50	8	43	70	35	25	10
KRF-C GR 3	80	12.5	54	140	60	40	20
KRF-C GR 4	100	15.5	68	200	80	60	30
KRF-C GR 6	150	53	89	350	120	100	60

* Flow rates are based on 100/125 micron and depend on water quality and filter mesh. So the actual allowed flow may vary. Contact Krone for exact dimensioning.

Technical data and dimensions

KRF-RL

For corrosive media

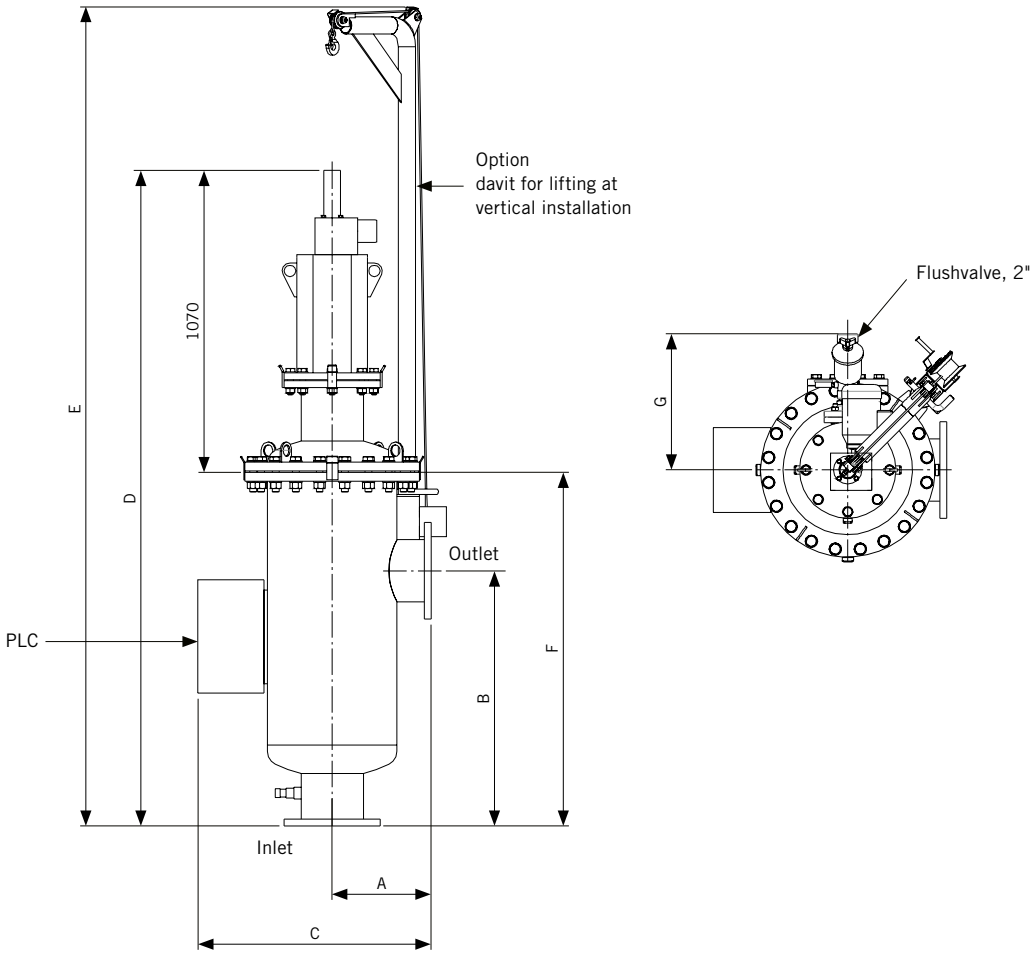

Model	Nom. diameter Flange connection	A	B	C	D	E	Filter surface area
	DN	mm	mm	mm	mm	mm	cm^2
KRF-RL 6	150	350	600	824	2.040	2.700	7.990
KRF-RL 8	200	350	900	824	2.320	2.975	10.600
KRF-RL 10	250	350	900	824	2.600	3.300	13.210
KRF-RL 12	300	400	900	1.025	2.320	2.975	16.500
KRF-RL 14	350	400	900	1.025	2.600	3.300	21.300

Model	Nom. diameter Flange connection	Flushing volume/backflush	Weight	Max. flow rate
	DN	L	kg	m^3/h*
KRF-RL 6	150	105	310	500
KRF-RL 8	200	140	365	700
KRF-RL 10	250	175	405	1.150
KRF-RL 12	300	140	550	1.400
KRF-RL 14	350	175	610	1.800

* Flow rates are based on 100/125 micron and depend on water quality and filter mesh. So the actual allowed flow may vary. Contact Krone for exact dimensioning.

Technical data

Technical data		
	Standard version	**Special version or optional extras equipment**
Filter insert/filtration degree	Filter insert 25 µm– 2 mm	–
Filter cover	Cover with bolts and nuts	–
Venting device	Plug	Ball valve
Drain device	Plug	Ball valve
Connections	Flange in accordance with DIN 2632/Form C PN 10	As specified by customer (e.g. ANSI, JIS)
Materials		ASTM
Housing	CS carbon steel (Epoxy + Polyester)	SS304, SS316/SS316Ti, H II steel, CrNi, 1.0425
Seals	NBR	PTFE/FPM, other
Perforated plate/ mesh/cleaning nozzle	SS304/PVC	SS316L/POM
Drain valve	Brass/SS/PA	St, Ms, SS304, SS316, Rg 5
Version		
Electric gear motor	3 x 400 V/50 Hz, protection class IP 65	As specified by customer
Control	Not mounted to filter With transformer 500 V/400 V/230 V – 50 Hz/60 Hz, protection class IP 65, programmable	Mounted on the filter as specified by the customer
Flush outlet valve	2" hydraulic operated valve	Electro-pneumatic (230 V, 6 bar)/(24 V, 6 bar) protection class IP 65
Surface treatment		
Steel housing		
Interior	Epoxy + Polyester	Epoxy-resin paint, hard rubber
Exterior	Epoxy	–
Stainless steel	Glass bead blasted, pickled and passivated	–

Accessories

We produce and deliver additional design and material variants on request.
We solicit your request.

Overview of our Filter Types

Self-Cleaning-Filter / SCF

- KAF® — Self cleaning Bernoulli®-filter
- KAF-G
- KAF-S
- KRF — Backflush-filter
- KAS — Scraper filter

Single filter

- KSF® — Single basket filter (flanged)
- KMF — Threaded basket filter
- KWF — Welded/custom made basket filter
- KWF-Inline — Inlet flange and outlet flange inline

Duplex filter

- KDF-K — Duplex filter
- KDF-V — Valve switch duplex filter
- KDF-VB — Butterfly valve switch filter
- KDF-W — Duplex filter

Other filter solutions

- KBF — Bag filter
- KBF-M — Multi-Bag filter
- KOW — Oil and water separator
- KCS — Centrifugal separator

Accessories

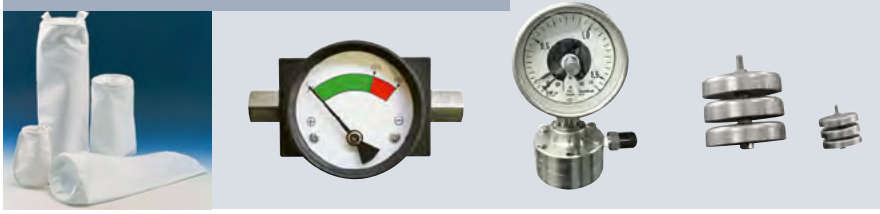

- DeltaP — Differential pressure indicator
  Contaminant level indicator
- Filterbags
- Magnets

Filter elements

- Basket elements
- Ring elements
- Star-pleated elements
- Wedge wire elements
- GRP/FRP PP inserts
- Custom-made elements

www.krone-filter.com

Krone Filter Solutions GmbH
Industriestrasse 19 | 28876 Oyten/Germany
Phone +49 4207 98769-0 | Fax +49 4207 98769-27
filter@krone-filter.com | www.krone-filter.com
www.krone-filtershop24.com

KRONEFILTER.COM
SOLUTIONS IN FILTRATION

KF-PCIII-10-2026-D4M26013-Rev. 3.8

10.2026 © by Krone Filter Solutions GmbH, subject to change.

Certificate No: LR26395988TA
Issue Date: 09/09/2026
Expiry Date: 08/09/2031

Type Approval Certificate

This is to certify that the undernoted product(s) has/have been tested with satisfactory results in accordance with the relevant requirements of the Lloyd's Register Type Approval System.

Manufacturer	**Krone Filter Solutions GmbH**
Address	Industriestr. 19, Oyten, 28876, Germany
Type	Automatic self-cleaning and basket filters
Description	Single, duplex and self-cleaning automatic filter with several housing sizes and combinations made from standard materials spheroidal iron castings EN-GJS-500-7 (GGG 50)* or EN-GJS-400-15 (GGG 40), carbon steel optional rubber lined or stainless steel.
Trade Name	KSF, KMF, KDF-K, KDF-V, KAF, KAF-S, KAF-G, KRF
Application	Filter depending on type for diesel oil, HFO, oil, gasoline/petrol, LNG/LPG liquefied gases, nitrogen or water piping systems in ship and offshore installations classed or intended for Classification with Lloyd’s Register.
Specified Standard	Lloyd’s Register Rules and Regulations for the Classification of Ships, July 2026
Other Conditions	The manufacturer’s installation instructions are to be sought. *) Not to be used for applications with expected significant chock or vibration loads.

Torsten Schroeder

Engineering - Piping/ Decarbonisation - Senior Specialist to Lloyd's Register EMEA
A member of the Lloyd's Register group

71 Fenchurch Street, London, EC3M 4BS, United Kingdom

Lloyd's Register Group Limited, its affiliates and subsidiaries and their respective officers, employees or agents are, individually and collectively, referred to in this clause as 'Lloyd's Register'. Lloyd's Register assumes no responsibility and shall not be liable to any person for any loss, damage or expense caused by reliance on the information or advice in this document or howsoever provided, unless that person has signed a contract with the relevant Lloyd's Register entity for the provision of this information or advice and in that case any responsibility or liability is exclusively on the terms and conditions set out in that contract.

Certificate No: LR26395988TA
Issue Date: 09/09/2026
Expiry Date: 08/09/2031

Type Approval Certificate

This certificate is not valid for equipment, the design, ratings or operating parameters of which have been varied from the specimen tested. The manufacturer should notify Lloyd's Register EMEA of any modification or changes to the equipment in order to obtain a valid Certificate.

Previous Version: LR21315849TA, previous 16/20086

The Design Appraisal Document TSO/26-062383, previous HTS/ENS 34963-16, Issue 1 and its supplementary Type Approval Terms and Conditions form part of this Certificate.

71 Fenchurch Street, London, EC3M 4BS, United Kingdom

Lloyd's Register Group Limited, its affiliates and subsidiaries and their respective officers, employees or agents are, individually and collectively, referred to in this clause as 'Lloyd's Register'. Lloyd's Register assumes no responsibility and shall not be liable to any person for any loss, damage or expense caused by reliance on the information or advice in this document or howsoever provided, unless that person has signed a contract with the relevant Lloyd's Register entity for the provision of this information or advice and in that case any responsibility or liability is exclusively on the terms and conditions set out in that contract.

Certificate No: LR26395988TA
Issue Date: 09/09/2026
Expiry Date: 08/09/2031

Appendix

RATINGS	Filter	Nominal Pressures [bar]	Size range:	Material:
	KSF	6, 10, 25	DN 15 – DN 600	Spheroidal iron casting
	KMF	6, 10, 25	G ½" – 2 ½"	Spheroidal iron casting
	KDF-K	6, 10, 25	DN 15 – DN 250	Spheroidal iron casting
	KDF-V	6, 10, 25	DN 100 – DN 600	Spheroidal iron casting, carbon steel
	KRF	6, 10	DN 32 – DN 400	Spheroidal iron casting, carbon steel
	KAF	6, 10	DN 50 – DN 1000	Spheroidal iron casting, carbon or stainless steel,
	KAF-S	6, 10	DN 50 – DN 1000	Spheroidal iron casting, carbon or stainless steel,
	KAF-G	6, 10	DN 50 – DN 1000	Spheroidal iron casting, carbon or stainless steel,

Material:	Temperature range:	For fluids**:
Spheroidal cast iron	-10 up to +300°C	MDO, HFO, oil, gasoline/petrol, seawater, river water, demineralized water
Austenitic stainless steel: 1.4571, 1.4401, 1.4404, 1.4408, 1.4539, 1.4301, 1.4541, SA240-304L, SA240-316Ti, SA240-321, SA240-316L, SA240-904L,	-196 up to +300°C	MDO, HFO, oil, nitrogen, LNG/LPG liquefied gases, gasoline/petrol, seawater, river water, demineralized water
Duplex stainless steel: 1.4462, 1.4463, UNS S31803	-40 up to +250°C	seawater
Super duplex: 1.4410, UNS 32750		
Carbon steel: St 50, P235GH, P245GH, P250GH, P265GH, SA516 Gr60, SA516 Gr70 SA516 Gr60+N, SA516 Gr70+N	-40 up to +100°C	MDO, HFO, oil, gasoline/petrol, seawater, river water, demineralized water

**) including fluids and mixture of similar evaluation class

Pressure reductions at elevated temperatures are to be considered.

Media depending on type: KAF, KAF-S, KAF-G, KRF: water, seawater
KSF, KMF, KDF-K and KDF-V: MDO, oil, nitrogen, water, seawater

Lloyd's Register Group Limited, its affiliates and subsidiaries and their respective officers, employees or agents are, individually and collectively, referred to in this clause as 'Lloyd's Register'. Lloyd's Register assumes no responsibility and shall not be liable to any person for any loss, damage or expense caused by reliance on the information or advice in this document or howsoever provided, unless that person has signed a contract with the relevant Lloyd's Register entity for the provision of this information or advice and in that case any responsibility or liability is exclusively on the terms and conditions set out in that contract.

LLOYD'S REGISTER TYPE APPROVAL – DESIGN APPRAISAL DOCUMENT

Issued by: HAMBURG TECHNICAL SUPPORT OFFICE (TSO/26-062382)

Issued to: KRONE FILTER SOLUTIONS GMBH

For: SINGLE, DUPLEX AND AUTOMATIC FILTER

Types: KSF, KMF, KDF-K, KDF-V, KAF, KAF-S, KAF-G, KRF

The undernoted documents have been reviewed for compliance with the requirements of the Lloyd's Register Type Approval System Procedure TA14 Version 06 (April 2025) and this Design Appraisal Document forms part of the Certificate.

APPROVAL DOCUMENTATION

-	Application Checklist	26.05.2026
-	Product Catalogue / general Data sheets for types KSF, KMF,KDFK, KDFV, KDF and KRF	2014
KSF LR Data sheet, Rev. 4	KSF	2016
KSF080.04.16.00.01, Rev. 0	AW 613 PN16 DN 80 incl. Parts list	22.04.2008
KSF80.04.16.01.01, Rev. 1	Body DN 80 GR4	10.03.2006
KSF000.05.16.02.01, Rev. 0	Cover GR5	25.03.2009
KMF LR Data sheet, Rev. 4	KMF	2016
KMF000.03.05.16.00.01, Rev 0	KMF GR3 incl. Parts list	22.11.2013
KMF000.03.05.16.01.01, Rev 0	Body KMF GR3 / GR1 ½" – G2"	22.11.2013
KSF000.03.05.16.02.01, Rev.1	KSF Cover GR3	24.11.2011
KDFK LR Data sheet, Rev. 4	KDFK	2016
KDFK080.06.05.10.00.01, Rev. 0	KDFK DN 80 PN 10 incl. Parts list	24.02.2011
KDFK080.04.05.10.01.02, Rev.2	KDFK Body GR4 DN 80 PN10 JIS 10K	20.03.2014
KSF000.06.10.02.01, Rev. 0	Cover GR6	31.03.2009
KDFK250.07.05.10.00.01	KDF-K Double filter DN 250 PN 16	23.10.2019
KDFK250.07.05.10.01.01	KSF Body DN 250 PN 10 Gr. 7	23.10.2019
KSF00.08.05.10.02.01, rev. 1	Cover KSF Gr.8	01.04.2009
KDFV LR Data sheet, Rev. 2	KDFV	2016
KDFV150.07.05.10.00.20, Rev 1	KDFV GR7 DN 150 incl. Parts list	12.07.2012
KDFV150.07.05.10.01.20, Rev 1	KDFV Body GR7 DN 150	27.04.2012
KDFV150.07.05.16.08.20, Rev 4	KDFV Body Change Over GR7 DN 150	12.07.2012
KSF000.07.05.10.02.01, Rev. 0	Cover GR7	24.02.2011
KAF LR Data sheet, Rev. 0	KAF	2016
KAF150.01.16.05.00.01, Rev. 0	KAF DN 150 PN5 JIS B 2220 K5 FF incl. Parts list	16.05.2014
KAF150.00.05.05.01.02, Rev. 0	Body KAF DN 150 PN5	16.05.2014
KAF150.00.16.05.01.02, Rev. 0	Body KAF DN 150 PN5 rubber lined incl. Parts list	16.05.2014
KAF150.00.05.10.02.01, Rev. 0	KAF Cover DN 150 PN 19 / DNC-50	12.12.2013
KAF150.00.16.10.02.01, Rev. 0	KAF Cover DN 150 PN 19 / DNC-50 incl. Parts list	12.12.2013
KRF LR Data sheet, Rev. 4	KRF-BF	2016

Lloyd's Register Group Limited, its affiliates and subsidiaries and their respective officers, employees or agents are, individually and collectively, referred to in this clause as 'Lloyd's Register'. Lloyd's Register assumes no responsibility and shall not be liable to any person for any loss, damage or expense caused by reliance on the information or advice in this document or howsoever provided, unless that person has signed a contract with the relevant Lloyd's Register entity for the provision of this information or advice and in that case any responsibility or liability is exclusively on the terms and conditions set out in that contract.

TEST REPORTS

PRJ111005142747	Production Quality Assessment in Oyten	13.07.2026
HPC1461050/01	LR Works Inspection including hydrostatic burst pressure tests at 100 bar for type KSF: DN 50, size 2; KSF: DN 80, size 4 and KSF: DN 100, size 8	14.12.2015
HPC1461050/02	hydrostatic burst pressure tests at 100 bar for type KMF: 2 ½" size 4; type KDF-K : DN 80, size 6 and KDF-K: DN 20, size 2 witnessed by LR Surveyor at Krone in Oyten	17.12.2015
HPC1461050/03	hydrostatic burst pressure tests at 40 bar for type KAF: DN 200, PN 10 and at 64 bar for type KDF-V: DN 150, size 7, PN 16 witnessed by LR Surveyor at Krone in Oyten	21.12.2015
HPC1461050/04	Visit of an existing installation with function test of KAF self-cleaning automatic filter at 'Elbphilharmonie Hamburg'	11.01.2016

Torsten Schröder
Senior Specialist
Engineering Systems
Global Technical Support Office
Lloyd's Register EMEA
T +49 (0)40 349 700 10 259
E torsten.schroeder@lr.org

Supplementary Type Approval Terms and Conditions

Type Approval certifies that a representative sample of the product(s) referred to herein has/have been found to meet the applicable design criteria for the use specified herein. It does not mean or imply approval for any other use, nor approval of any product(s) designed or manufactured otherwise than in strict conformity with the said representative sample.

Type Approval is based on the understanding that the manufacturer's recommendations and instructions and any relevant requirements of the Rules and Regulations are complied with.

Type Approval does not eliminate the need for normal inspection and survey procedures required by the Rules and Regulations. Lloyd's Register EMEA reserves the right to cancel or withdraw this Type Approval Certificate in accordance with the Lloyd's Register Type Approval System Procedure.

Lloyd's Register Group Limited, its affiliates and subsidiaries and their respective officers, employees or agents are, individually and collectively, referred to in this clause as 'Lloyd's Register'. Lloyd's Register assumes no responsibility and shall not be liable to any person for any loss, damage or expense caused by reliance on the information or advice in this document or howsoever provided, unless that person has signed a contract with the relevant Lloyd's Register entity for the provision of this information or advice and in that case any responsibility or liability is exclusively on the terms and conditions set out in that contract.