KSF®

Strainer basket filter

PN	6–25
DN	15–600
ANSI	1 ½–24"
JIS	15–600
GOST	15–600

Lloyd's Register
Design Appraisel
Certificate no.
TSO/26-062382 / LR26395988TA

Lloyd's Register
Type Approval
Certificate no. LR26395988TA

DEKRA
ISO 9001:2015

Filter gemäß ÖNORM
ÖNORM H 5195-1

Applications

The KSF® filter is a versatile strainer basket filter for liquid media made from GGG-50 (nodular graphite) in accordance with EN-GJS-500-7/ASTM 80-55-06 or from Rg 10, (special version). It is characterized by high performance, low weight and space-saving design, as well as an extremely easy, fast cleaning.

- **Flexible combination of housing sizes, filter surfaces and connecting flanges.**
  Thirteen housing sizes can be supplied with different connecting flanges, which ensures adaptation to the operating requirements and dirt loads.
- **Variable filter surface selection.**

Approvals

3.1. Certificate, DGRL/TÜV, GL, LS, DNV, ABS,
TR TF/TR CU Certificates (EAC),
Lloyd's Register Type Approval Certificate No. LR26395988TA

CE conformity evaluation according 2014/68/EU and marking according the directive.

Germanischer Lloyd · DNV·GL · ABS · TR TF EAC · Lloyd's Register

KRONEFILTER®.COM
SOLUTIONS IN FILTRATION

Brief description

The filter consists of a cast housing with opposing connecting flanges of equal height. The filter cover is alternatively fastened with stud bolts and nuts or with a clamp. The venting device in the cover and the drain device in the housing are included in the scope of supply.

- **Quick-release clamp for quick cleaning of the strainers (to DN 200).**

Notice:
The compatibility between medium and vessel or sealing material is the responsibility of the operator.
The design of the pressure vessel is based on a quasi-static operation (load cycle number ≤ 1000 according to AD 2000 Merkblatt S1, section 1.4). Max. Differential pressure inlet - outlet 1 bar.

Filter media

Alternatively the filter can be equipped with a basket strainer, ring type strainer or other inserts. For example the filter insert consists of perforated plate, which is optionally spanned with mesh of different widths. The medium to be filtered flows through the strainer insert from the inside to the outside. The particles remain in the strainer and can be removed with the strainer.

Safety instructions

Do not use the filter with clamp closure for filtering of hazardous media (e.g. toxic, flammable, or caustic media) and gases or vapors! In these cases select bolts and nuts for the cover closure. Prior to using the filter verify the intended use. If there are changes in operating conditions or the medium then a conformity evaluation in accordance with PED 2014/68/EU must be carried out (for this please contact us as the manufacturer or execute a hazard analysis with conformity evaluation). The allowable differential pressure/clogging rate for the insert (page 7., and specific contract documentation) shall not be exceeded and can lead to equipment damage.

Installation

Installation in pipes is done by means of flanges. Ensure that the standard version of the filter is installed vertically and mechanically tension-free without additional loads. The medium must flow in the direction specified on the housing. Incorrect installation can cause filter malfunctions and damage the inserts. The allowable differential pressure/clogging rate for the insert (page 7., and specific contract documentation) shall not be exceeded and can lead to equipment damage.

Note:
For rubberlined units and other inserted plugs. Always counter hold with appropriate tool (open end wrench) when loosening the plug in order to avoid damage to vessel body and lining by over torque force to plug on filter vessel. Follow documentation instructions (GA drawing) ect.

Commissioning/operating instructions

1. Open the venting device until liquid escapes.
2. Close venting device.
3. Filter is ready for operation.

Attention:
Since this is a pressure vessel make absolutely sure that the filter is depressurized before starting maintenance tasks. Follow the safety and accident prevention guidelines required for the medium.

Note:
For rubberlined units and other inserted plugs. Always counter hold with appropriate tool (open end wrench) when loosening the plug in order to avoid damage to vessel body and lining by over torque force to plug on filter vessel. Follow documentation instructions (GA drawing) ect.

Cleaning

1. Relieve the pressure on the filter by means of the venting device and drain device.
2. Loosen the filter closure and take off the cover.
3. Drain the filter via the drain device to a level that is at least below the strainer support.
4. Pull the strainer insert upward and out of the filter housing. The strainer can now be cleaned by carefull blowing it out or blasting it with compressed air, steam, or water. If necessary the strainer must be soaked and cleaned in a suitable cleaning agent. In some circumstances optimum cleaning is achieved by means of ultrasonic bath. For all cleaning types ensure that the filter mesh is not damaged.
5. When assembling the filter in the reverse sequence, check the sealing elements for wear and replace them if necessary.

Note:
For rubberlined units and other inserted plugs. Always counter hold with appropriate tool (open end wrench) when loosening the plug in order to avoid damage to vessel body and lining by over torque force to plug on filter vessel. Follow documentation instructions (GA drawing) ect.

Maintanance & Inspections

A single basket filter does not have a high grade of maintenance. Nevertheless the filter shall regularly be visually inspected from the outside during regular shift maintenance on site. Recommendation for visual inspection is 1 time per month. The filter has to be cleaned acc. site requirements and present grade of impurities (see position: cleaning).
During the removal of the basket the filter vessel and insert shall be visually inspected and both insert and vessel cleaned if necessary.
Minimum 1 visual inspection from inside per year is mandatory in operation, an inspection every 6 months is recommended.

Recommendation:
All gaskets shall be replaced with new gaskets for safety in operation. Old gaskets can pose a danger of leakage and may damage equipment.
Filter insert shall regularly be changed for a new one, recommended is a change after 3 years of operation as minimum.
Optional rubberlined surfaces shall regularly be inspected for superficial damages, recommended is an inspection every 6 months, minimum 1 time per year. Damages shall immediately be repaired acc. manufacturer repair procedure for rubberlining. Operator shall handle rubberlined filters with care and avoid mechanical damage of lining.
During special maintenance (Shutdown of plants or Yard stays) on heavy duty applications a spark test of rubberlining is recommended. The manufacturer shall be contacted for details before performing it to check suitability of test equipment.

Reparable ITEM´s of filter

The filter has no repairable items, damaged parts shall be replaced. Its recommended to change gaskets after disassembly of the gasket area.

Disposal Plan

No harmful substances or asbestos are used as material of construction.
The filter has stainless steel and therefore regenerable inserts which can be cleaned by appropriate means and following safety instructions of media retained in inserts. Operator shall follow safety instruction of filtered media during cleaning.
Damaged filter insert shall be disposed acc. local regulations for stainless steel metallic waste (fully recyclable) after cleaning. Too high differential pressure dirty before cleaning may damage the fine mesh if installed. A dp over 0.5 bar is not recommended.
Rubber and synthetic materials (plastic) shall be disposed acc. local regulations, Gaskets are NBR or Aramid fibers reinforced NBR and shall be disposed acc. applicable local regulations.

Storage plan

Goods not installed shall be stored in dry place without UV radiation and protected from humidity from temperatures in a recommended range of +5 to +45°C. Recommended shelf time 5 years due to gasket lifetime. Goods stored shall be inspected visually acc. storage conditions on regular basis. Minimum yearly visual inspection (outside/inside) is recommended.
Flanges and all openings shall be closed during storage. Wrapping of items into plastic in storage is not environmentally recommended and also may lead to condensation on metal surface of filter and surface corrosion. Covering of goods is preferred in storage with breathable material (fabric). Drying agent use is recommended.

Download for planners *

PDF Specific data sheet according to GR
WORD Specific data sheet according to GR
STEP Schematics 3D according to DN/GR

Product online

* Krone Filter Solutions offers this special service to all clients.

The KSF® "family" from size 1 to size 11

13 body sizes (GR = grade) can be combined with various flange sizes DN. This feature allows to comply with filtration requirement of higher filter capacity due to high dirt load or long cleaning intervals if requested.

The STANDARD SIZE (GR) (marked with in the table page 5) is sufficient for all standard filtration requirements. The OVERSIZED (GR) (marked with in the table page 5) is for applications with very high dirt load and longer intervals of cleaning the insert.

Example:

- DN 100 GR 5 = STANDARD SIZE (GR)
- DN 100 GR 8 = OVERSIZED (GR)

The dimensioning philosophy applied is that the ratio between the INLET pipe diameter and filter surface is 1:4 thus offering 400 % more filter surface then inlet pipe surface. Therefore the mesh does not cause additional pressure loss.

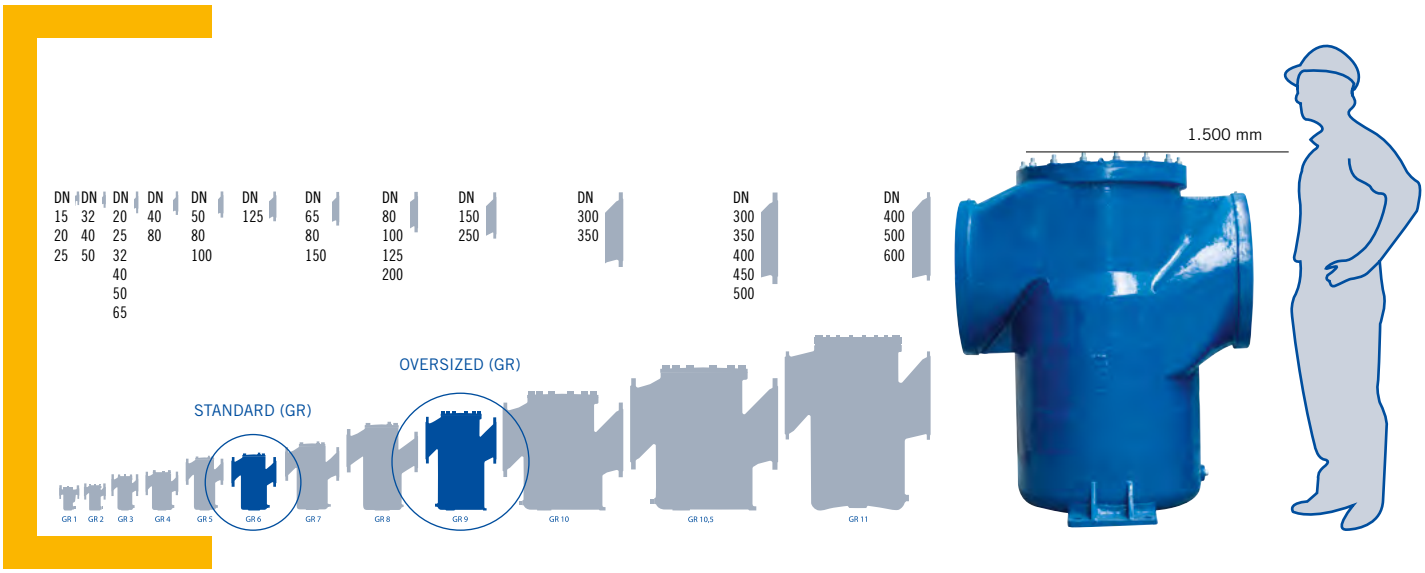

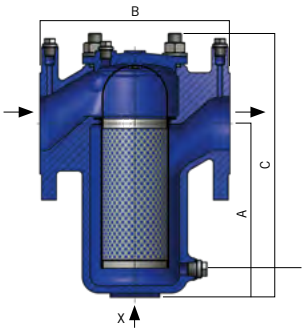

G ⅜" from GR 1–GR 10
G 1" from GR 10,5–GR 11

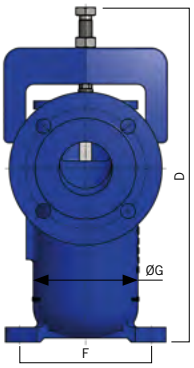

Basket strainer

Standard connections for differential pressure indicator/switch G ¼"

KSF® combination version (clamp version pre-drilled), can be converted by using stud bolts.

Housing	Nom. diameter flange connection	Vessel design pressure		G	A	B	D	C	E	F	Flow rate	Volume	Filter surface area	Weight
Size	DN	Clamp	Bolts**				Clamp	Bolt	Ø	Pitch	at 2,5 m/s		Basket	
mm	mm	bar	bar	mm	mm	mm	mm	mm	mm	mm	m³/h	l	cm²	approx. in kg
1	15	16	16 (25)*	81	156	171	264	220	Ohne Füße		3	1	150	6,7
	20										3			
	25										4,5			
2	32	10	16 (25)*	102	164	189	340	250	Ohne Füße		7	1,2	270	13,2
	40										12			
	50										18			
3	20	10	16 (25)*	127	214	230	400	315	12	161	3	3,5	440	25
	25										4,5			
	32										7			
	40										12			
	50										18			
	65										30			
3,5	65	10	16 (25)*	127	323	230	516	431	12	161	30	3,8	708	27
4	40	10	16 (25)*	168	235	279	450	350	12	201	12	6,5	740	28
	80										45			
5	50	10	16 (25)*	176	324	317	560	465	12	216	18	9	950	42
	80										45			
	100										70			
6	125	6	10 (16)*	222	324	379	610	510	14	261	110	15	1.350	55
7	65	6	10 (16)*	262	389	461	720	580	14	311	30	27	1.980	75
	80										45			
	150										160			
	200										220			
8	80	6	10 (16)*	322	489	605	890	745	23	360	45	53	2.950	140
	100										70			
	125										110			
	200										280			
9	150	–	10 (16)*	402	605	604	–	880	23	460	160	85	3.590	195
	250										440			
10	300	–	6 (10, 16)*	472	730	719	–	1.035	23	530	635	140	5.610	300
	350										900			
10,5	300	–	6 (10, 16)*	680	920	1.166	–	1.425	33	280	700***	485	13.000	1.300
	350										900***			
	400										2.000			
	450										2.500			
	500										2.500			
11	400	–	6 (10, 16)*	790	1.000	1.246	–	1.500	33	966	2.000	600	16.000	1.400
	500										2.500			
	600										3.000			

STANDARD SIZE (GR) OVERSIZED (GR)

* Special version ** For screws dependent on DN and medium to PN 25 *** Flowrate limited by inlet flange

Technical data/Safety instructions

Technical data		
	Standard version	**Special version or supplemental equipment**
Filter insert design	Basket strainer insert	Ringtype strainer insert, cartridges, slot wedge wire, star pleated strainer
Filter mesh	10–1,000 µm (microns) Stainless steel mesh 1.5–10 mm perforated plate, round perforation	5 µm, square perforation, braid, cartridges, pleated mesh
Filter insert dp pressure	Allowable differential pressure filter insert 1 bar	Higher allowable differential pressure for insert possible (design modification)
Filter cover	Bolts and nuts	GR 1–GR 8 clamp. Housing with clamp already predrilled for stud bolts – modification by customer possible.
Venting device	Bolt, G ¼"	Ball valve/Flange*
Draining device	Bolt, G ⅜" from GR 1–GR 10, G 1" from GR 10.5–GR 11	Ball valve/Flange*
Connection	Flange in accordance with EN 1092-1 11B	As specified by the customer/ANSI/JIS
Materials		
Housing and cover	GGG-50, DN 1693 DIN EN 1563 or EN GJS-500-07/ASTM 80-55-06	CuSn10/Rg 10, GGG-40.3 (EN GJS-400-18)
Cover seal	NBR	FPM, EPDM, MPQ, PTFE
Perforated plate/mesh	SS316, SS304, SS304/SS316/SS316Ti	SS316Ti/SS316, Ms/Bz, Hastelloy C 4, Titanium, various plastics
Extras		
Additional filter	-	Magnetic filter insert
Heater	-	Customized heating connection
Zinc protection	-	For sea water filters
Differential pressure indicator	Connection possibility, G ¼"	Optical, with electric contacts
Body/Cover Surface treatment		
Internal	Anti-corrosion primer	Untreated, anti-corrosion oil, epoxy resin, Chemonit 33 (rubberlined), E-CTFE, Belzona 2011
External	Epoxy paint RAL 5010 blue	Epoxy resin, E-CTFE, Levasynt, RAL acc. specification
Design/Certification	Declaration of Conformity – Lloyds Register certified foundry acc. to PED 2014/68/EU	3.1. Certificate, PED/TÜV, GL, LS, DNV, ABS, LR TA type approval, TR TF/TR CU Certificates (EAC) or on request

* Depends on size of body

Differential pressure indicator

KSF® filter with differential pressure indicator

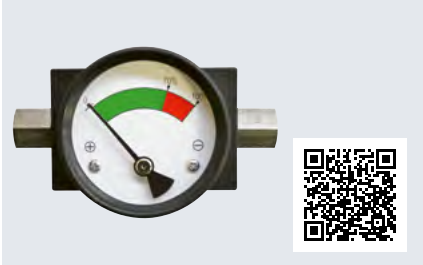

Differential pressure indicator
Product online

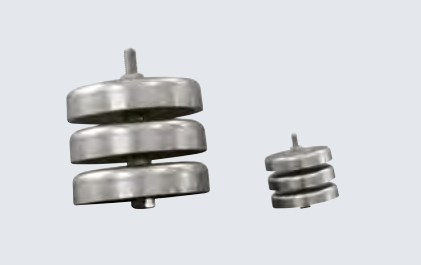

Magnetic inserts
Product online

Differential pressure indicator
http://www.krone-filter.com/product.php?id=13

Magnetic inserts
http://www.krone-filter.com/product.php?id=19

KSF® spare part sets

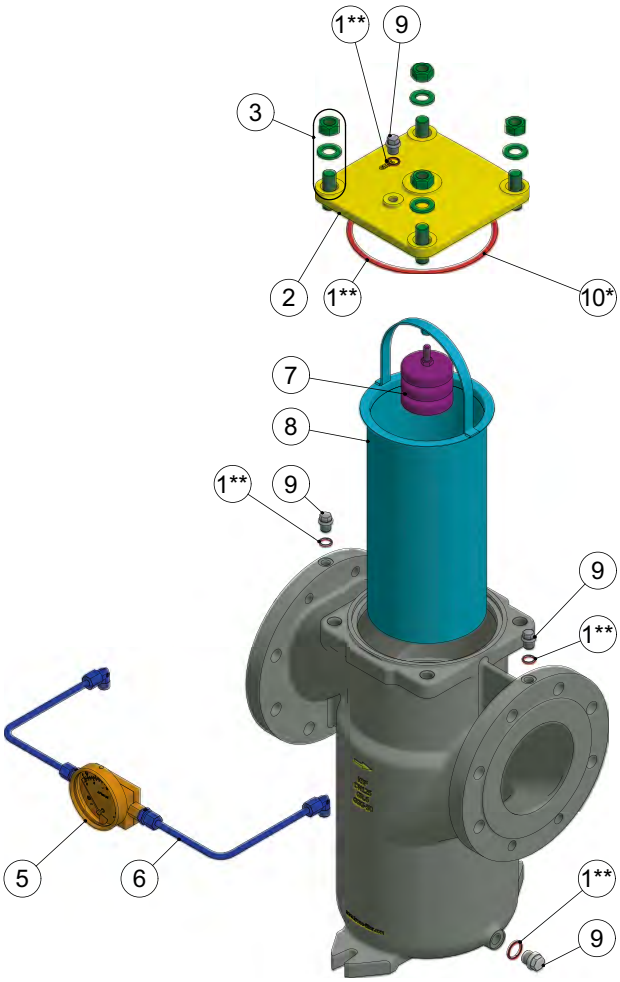

Version:
Screws & nuts

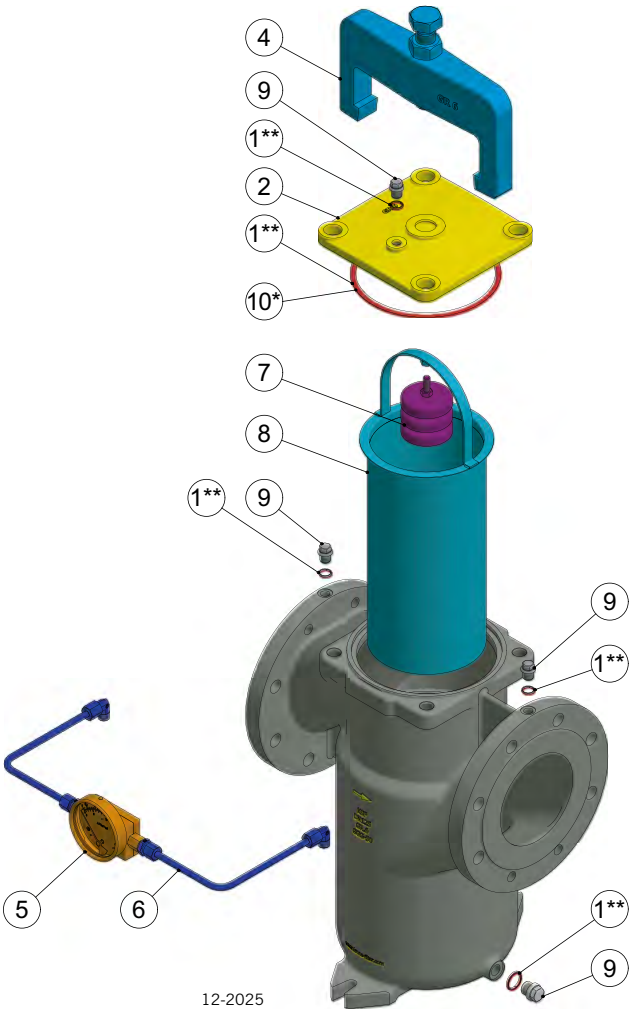

Version:
Clamp lock

KSF® spare part sets			
Set	**Content**	**Set**	**Content**
1**	SET all gaskets	6	Mounting kit for DP Indicator
2	Cover	7	Magnetic filter insert
3	Bolts, nuts & washer for cover	8	Insert
4	Clamp incl. bolt & nut	9	Plugs; Vent, Drain, DP Connection
5	DP Indicator	10*	Cover gasket only

www.krone-filter.com

Application examples

KSF®

1. KSF® GR 8, Plate heat exchanger protection
2. KSF® GR 8, Plate heat exchanger protection
3. KSF® DN 300, Rubberlined
4. KSF® DN 300, Strainer

www.krone-filter.com

5 KSF®
6 KSF® GR 11, Condensate filter, power plant
7 KSF® GR 11
8 KSF® GR 11

www.krone-filter.com

Krone Filter Solutions GmbH
Industriestrasse 19 | 28876 Oyten/Germany
Phone +49 4207 98769-0 | Fax +49 4207 98769-27
filter@krone-filter.com | www.krone-filter.com
www.krone-filtershop24.com

KRONEFILTER.COM
SOLUTIONS IN FILTRATION

KF-PCIII-10-2026-D4M26013-Rev. 5.4

10.2026 © by Krone Filter Solutions GmbH, subject to change.

Certificate No: LR26395988TA
Issue Date: 09/09/2026
Expiry Date: 08/09/2031

Type Approval Certificate

This is to certify that the undernoted product(s) has/have been tested with satisfactory results in accordance with the relevant requirements of the Lloyd's Register Type Approval System.

Manufacturer	**Krone Filter Solutions GmbH**
Address	Industriestr. 19, Oyten, 28876, Germany
Type	Automatic self-cleaning and basket filters
Description	Single, duplex and self-cleaning automatic filter with several housing sizes and combinations made from standard materials spheroidal iron castings EN-GJS-500-7 (GGG 50)* or EN-GJS-400-15 (GGG 40), carbon steel optional rubber lined or stainless steel.
Trade Name	KSF, KMF, KDF-K, KDF-V, KAF, KAF-S, KAF-G, KRF
Application	Filter depending on type for diesel oil, HFO, oil, gasoline/petrol, LNG/LPG liquefied gases, nitrogen or water piping systems in ship and offshore installations classed or intended for Classification with Lloyd’s Register.
Specified Standard	Lloyd’s Register Rules and Regulations for the Classification of Ships, July 2026
Other Conditions	The manufacturer’s installation instructions are to be sought. *) Not to be used for applications with expected significant chock or vibration loads.

Torsten Schroeder

Engineering - Piping/ Decarbonisation - Senior Specialist to Lloyd's Register EMEA
A member of the Lloyd's Register group

71 Fenchurch Street, London, EC3M 4BS, United Kingdom

Lloyd's Register Group Limited, its affiliates and subsidiaries and their respective officers, employees or agents are, individually and collectively, referred to in this clause as 'Lloyd's Register'. Lloyd's Register assumes no responsibility and shall not be liable to any person for any loss, damage or expense caused by reliance on the information or advice in this document or howsoever provided, unless that person has signed a contract with the relevant Lloyd's Register entity for the provision of this information or advice and in that case any responsibility or liability is exclusively on the terms and conditions set out in that contract.

Certificate No: LR26395988TA
Issue Date: 09/09/2026
Expiry Date: 08/09/2031

Type Approval Certificate

This certificate is not valid for equipment, the design, ratings or operating parameters of which have been varied from the specimen tested. The manufacturer should notify Lloyd's Register EMEA of any modification or changes to the equipment in order to obtain a valid Certificate.

Previous Version: LR21315849TA, previous 16/20086

The Design Appraisal Document TSO/26-062383, previous HTS/ENS 34963-16, Issue 1 and its supplementary Type Approval Terms and Conditions form part of this Certificate.

71 Fenchurch Street, London, EC3M 4BS, United Kingdom

Lloyd's Register Group Limited, its affiliates and subsidiaries and their respective officers, employees or agents are, individually and collectively, referred to in this clause as 'Lloyd's Register'. Lloyd's Register assumes no responsibility and shall not be liable to any person for any loss, damage or expense caused by reliance on the information or advice in this document or howsoever provided, unless that person has signed a contract with the relevant Lloyd's Register entity for the provision of this information or advice and in that case any responsibility or liability is exclusively on the terms and conditions set out in that contract.

Certificate No: LR26395988TA
Issue Date: 09/09/2026
Expiry Date: 08/09/2031

Appendix

RATINGS	Filter	Nominal Pressures [bar]	Size range:	Material:
	KSF	6, 10, 25	DN 15 – DN 600	Spheroidal iron casting
	KMF	6, 10, 25	G ½" – 2 ½"	Spheroidal iron casting
	KDF-K	6, 10, 25	DN 15 – DN 250	Spheroidal iron casting
	KDF-V	6, 10, 25	DN 100 – DN 600	Spheroidal iron casting, carbon steel
	KRF	6, 10	DN 32 – DN 400	Spheroidal iron casting, carbon steel
	KAF	6, 10	DN 50 – DN 1000	Spheroidal iron casting, carbon or stainless steel,
	KAF-S	6, 10	DN 50 – DN 1000	Spheroidal iron casting, carbon or stainless steel,
	KAF-G	6, 10	DN 50 – DN 1000	Spheroidal iron casting, carbon or stainless steel,

Material:	Temperature range:	For fluids**:
Spheroidal cast iron	-10 up to +300°C	MDO, HFO, oil, gasoline/petrol, seawater, river water, demineralized water
Austenitic stainless steel: 1.4571, 1.4401, 1.4404, 1.4408, 1.4539, 1.4301, 1.4541, SA240-304L, SA240-316Ti, SA240-321, SA240-316L, SA240-904L,	-196 up to +300°C	MDO, HFO, oil, nitrogen, LNG/LPG liquefied gases, gasoline/petrol, seawater, river water, demineralized water
Duplex stainless steel: 1.4462, 1.4463, UNS S31803	-40 up to +250°C	seawater
Super duplex: 1.4410, UNS 32750		
Carbon steel: St 50, P235GH, P245GH, P250GH, P265GH, SA516 Gr60, SA516 Gr70 SA516 Gr60+N, SA516 Gr70+N	-40 up to +100°C	MDO, HFO, oil, gasoline/petrol, seawater, river water, demineralized water

**) including fluids and mixture of similar evaluation class

Pressure reductions at elevated temperatures are to be considered.

Media depending on type: KAF, KAF-S, KAF-G, KRF: water, seawater
KSF, KMF, KDF-K and KDF-V: MDO, oil, nitrogen, water, seawater

Lloyd's Register Group Limited, its affiliates and subsidiaries and their respective officers, employees or agents are, individually and collectively, referred to in this clause as 'Lloyd's Register'. Lloyd's Register assumes no responsibility and shall not be liable to any person for any loss, damage or expense caused by reliance on the information or advice in this document or howsoever provided, unless that person has signed a contract with the relevant Lloyd's Register entity for the provision of this information or advice and in that case any responsibility or liability is exclusively on the terms and conditions set out in that contract.

LLOYD'S REGISTER TYPE APPROVAL – DESIGN APPRAISAL DOCUMENT

Issued by: HAMBURG TECHNICAL SUPPORT OFFICE (TSO/26-062382)

Issued to: KRONE FILTER SOLUTIONS GMBH

For: SINGLE, DUPLEX AND AUTOMATIC FILTER

Types: KSF, KMF, KDF-K, KDF-V, KAF, KAF-S, KAF-G, KRF

The undernoted documents have been reviewed for compliance with the requirements of the Lloyd's Register Type Approval System Procedure TA14 Version 06 (April 2025) and this Design Appraisal Document forms part of the Certificate.

APPROVAL DOCUMENTATION

-	Application Checklist	26.05.2026
-	Product Catalogue / general Data sheets for types KSF, KMF,KDFK, KDFV, KDF and KRF	2014
KSF LR Data sheet, Rev. 4	KSF	2016
KSF080.04.16.00.01, Rev. 0	AW 613 PN16 DN 80 incl. Parts list	22.04.2008
KSF80.04.16.01.01, Rev. 1	Body DN 80 GR4	10.03.2006
KSF000.05.16.02.01, Rev. 0	Cover GR5	25.03.2009
KMF LR Data sheet, Rev. 4	KMF	2016
KMF000.03.05.16.00.01, Rev 0	KMF GR3 incl. Parts list	22.11.2013
KMF000.03.05.16.01.01, Rev 0	Body KMF GR3 / GR1 ½" – G2"	22.11.2013
KSF000.03.05.16.02.01, Rev.1	KSF Cover GR3	24.11.2011
KDFK LR Data sheet, Rev. 4	KDFK	2016
KDFK080.06.05.10.00.01, Rev. 0	KDFK DN 80 PN 10 incl. Parts list	24.02.2011
KDFK080.04.05.10.01.02, Rev.2	KDFK Body GR4 DN 80 PN10 JIS 10K	20.03.2014
KSF000.06.10.02.01, Rev. 0	Cover GR6	31.03.2009
KDFK250.07.05.10.00.01	KDF-K Double filter DN 250 PN 16	23.10.2019
KDFK250.07.05.10.01.01	KSF Body DN 250 PN 10 Gr. 7	23.10.2019
KSF00.08.05.10.02.01, rev. 1	Cover KSF Gr.8	01.04.2009
KDFV LR Data sheet, Rev. 2	KDFV	2016
KDFV150.07.05.10.00.20, Rev 1	KDFV GR7 DN 150 incl. Parts list	12.07.2012
KDFV150.07.05.10.01.20, Rev 1	KDFV Body GR7 DN 150	27.04.2012
KDFV150.07.05.16.08.20, Rev 4	KDFV Body Change Over GR7 DN 150	12.07.2012
KSF000.07.05.10.02.01, Rev. 0	Cover GR7	24.02.2011
KAF LR Data sheet, Rev. 0	KAF	2016
KAF150.01.16.05.00.01, Rev. 0	KAF DN 150 PN5 JIS B 2220 K5 FF incl. Parts list	16.05.2014
KAF150.00.05.05.01.02, Rev. 0	Body KAF DN 150 PN5	16.05.2014
KAF150.00.16.05.01.02, Rev. 0	Body KAF DN 150 PN5 rubber lined incl. Parts list	16.05.2014
KAF150.00.05.10.02.01, Rev. 0	KAF Cover DN 150 PN 19 / DNC-50	12.12.2013
KAF150.00.16.10.02.01, Rev. 0	KAF Cover DN 150 PN 19 / DNC-50 incl. Parts list	12.12.2013
KRF LR Data sheet, Rev. 4	KRF-BF	2016

Lloyd's Register Group Limited, its affiliates and subsidiaries and their respective officers, employees or agents are, individually and collectively, referred to in this clause as 'Lloyd's Register'. Lloyd's Register assumes no responsibility and shall not be liable to any person for any loss, damage or expense caused by reliance on the information or advice in this document or howsoever provided, unless that person has signed a contract with the relevant Lloyd's Register entity for the provision of this information or advice and in that case any responsibility or liability is exclusively on the terms and conditions set out in that contract.

TEST REPORTS

PRJ111005142747	Production Quality Assessment in Oyten	13.07.2026
HPC1461050/01	LR Works Inspection including hydrostatic burst pressure tests at 100 bar for type KSF: DN 50, size 2; KSF: DN 80, size 4 and KSF: DN 100, size 8	14.12.2015
HPC1461050/02	hydrostatic burst pressure tests at 100 bar for type KMF: 2 ½" size 4; type KDF-K : DN 80, size 6 and KDF-K: DN 20, size 2 witnessed by LR Surveyor at Krone in Oyten	17.12.2015
HPC1461050/03	hydrostatic burst pressure tests at 40 bar for type KAF: DN 200, PN 10 and at 64 bar for type KDF-V: DN 150, size 7, PN 16 witnessed by LR Surveyor at Krone in Oyten	21.12.2015
HPC1461050/04	Visit of an existing installation with function test of KAF self-cleaning automatic filter at 'Elbphilharmonie Hamburg'	11.01.2016

Torsten Schröder
Senior Specialist
Engineering Systems
Global Technical Support Office
Lloyd's Register EMEA
T +49 (0)40 349 700 10 259
E torsten.schroeder@lr.org

Supplementary Type Approval Terms and Conditions

Type Approval certifies that a representative sample of the product(s) referred to herein has/have been found to meet the applicable design criteria for the use specified herein. It does not mean or imply approval for any other use, nor approval of any product(s) designed or manufactured otherwise than in strict conformity with the said representative sample.

Type Approval is based on the understanding that the manufacturer's recommendations and instructions and any relevant requirements of the Rules and Regulations are complied with.

Type Approval does not eliminate the need for normal inspection and survey procedures required by the Rules and Regulations. Lloyd's Register EMEA reserves the right to cancel or withdraw this Type Approval Certificate in accordance with the Lloyd's Register Type Approval System Procedure.

Lloyd's Register Group Limited, its affiliates and subsidiaries and their respective officers, employees or agents are, individually and collectively, referred to in this clause as 'Lloyd's Register'. Lloyd's Register assumes no responsibility and shall not be liable to any person for any loss, damage or expense caused by reliance on the information or advice in this document or howsoever provided, unless that person has signed a contract with the relevant Lloyd's Register entity for the provision of this information or advice and in that case any responsibility or liability is exclusively on the terms and conditions set out in that contract.